MetScan V1 User Guide

Document version: 2026.07.11 17:38

1. Safety Instructions

> ❗ Before using this product, read the following safety instructions carefully to ensure proper operation and avoid risks arising from improper use.

1.1 Warning

The following actions may result in serious personal injury or equipment damage. All warnings must be strictly observed:

- Avoid direct eye exposure to the laser beam, as it may cause eye injury.
- Do not direct the laser beam toward any person or animal during operation.
- Do not allow children to touch or operate this product.
- Do not view the laser beam through magnifying optical instruments, as doing so may cause eye injury.

1.2 Laser Class and Specifications

- MetScan V1 emits both visible and invisible laser beams.
- Avoid direct eye exposure to laser beams.
- MetScan V1 is a Class 3R laser product with three integrated laser sources:
  - **Green Indicator Laser (Visible)**
    - Wavelength: 520 nm ± 10 nm
    - Beam Divergence: Approx. 2.4 mrad
    - Pulse Duration: 35 ns
    - Maximum Pulse Energy: < 1.57×10^{-9} J
  - **Methane Detection Infrared Laser (Invisible)**
    - Wavelength: 1650 nm ± 10 nm
    - Beam Divergence: Approx. 3 mrad
    - Pulse Duration: 1.21 ms
    - Maximum Pulse Energy: < 1.55×10^{-4} J
  - **Infrared Ranging Laser (Invisible)**

- Wavelength: 905 nm ± 10 nm
- Pulse Duration: 19 ns
- Maximum Pulse Energy: < 7.80×10^{-8} J

1.3 Laser Safety Classification

- This product is classified as a Class 3R laser product.
- This product complies with the following standards: IEC 60825-1, EN 60825-1:2014+A11:2021, and GB/T 7247.1-2024.

2. MetScan V1 Packing List

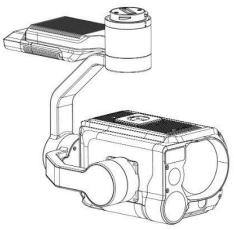

MetScan V1 * 1



Protective Lens Cover * 1



Adapter Cover * 1

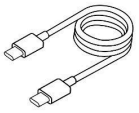

Dual USB-C Cable * 1



Dust Blower * 1

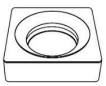

Methane Gas Cell * 1
(Approx. 1700 ppm • m)



- USB Type-C Adapter
- SIM Card Eject Pin
- Dust-Free Cleaning Cloth
- Soft Cleaning Brush
- Lens Cleaning Wipe
- M1.3 Hex Key

Accessories Case * 1

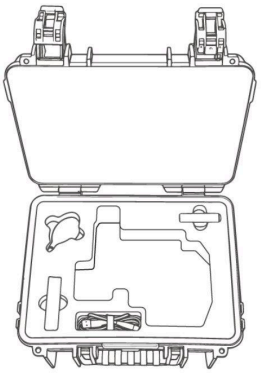

Dedicated Carrying Case * 1



Packing List, QC Certificate & Warranty Terms

3. MetScan V1 Main Components

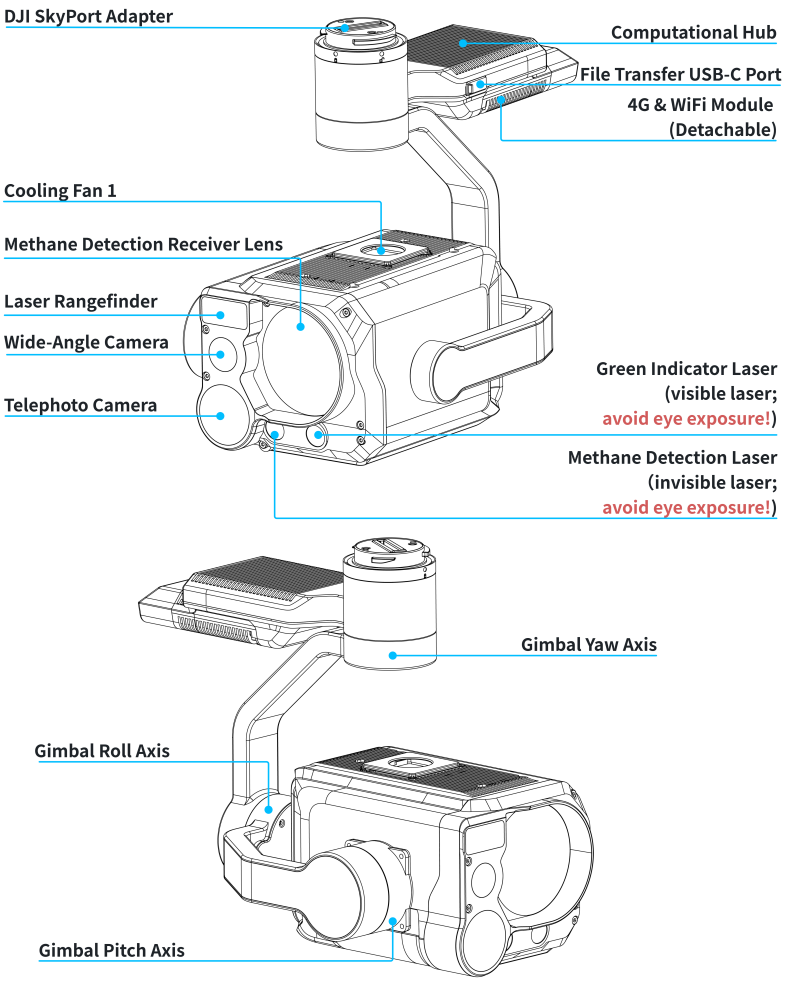

4. Installation on DJI Matrice 400 / 350 UAV

> ❗ This section uses the DJI Matrice 400 as an example. The same installation procedure also applies to the DJI Matrice 350 RTK.

1. Remove the adapter cover and the protective lens cover from MetScan V1.

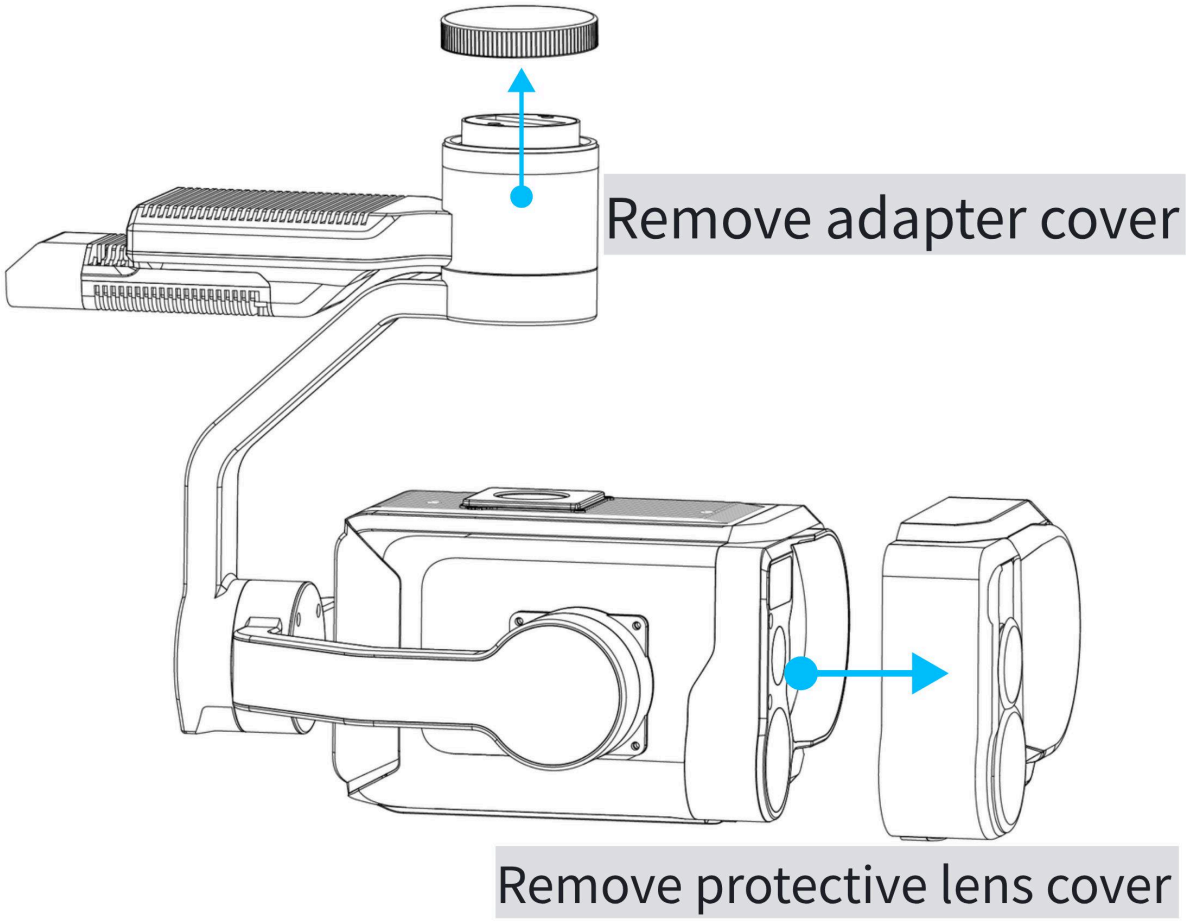

2. Align the white dot on the MetScan V1 SkyPort adapter with the red dot on the UAV SkyPort. Insert the MetScan V1 into the gimbal port and rotate it until the two red dots are aligned.

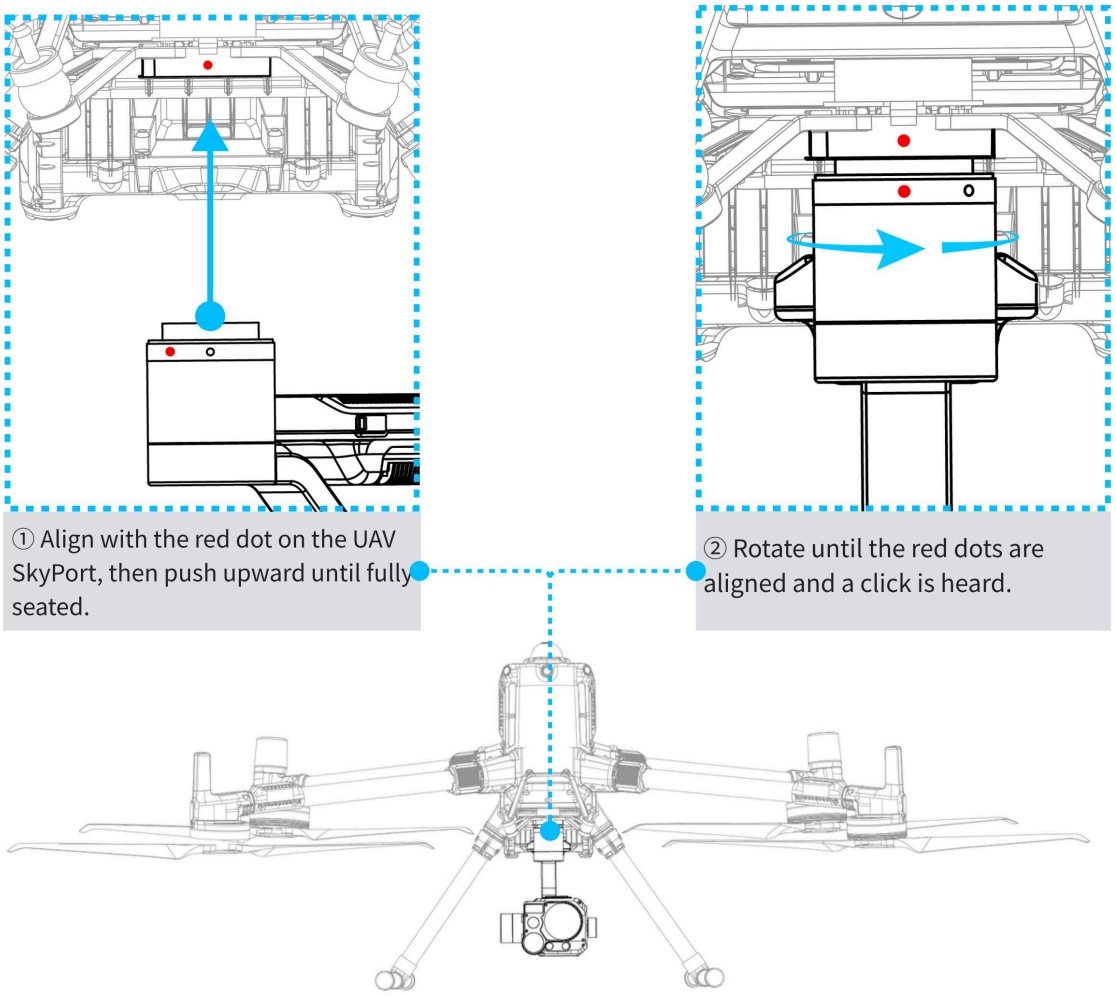

3. MetScan V1 has been successfully installed on the DJI Matrice 400.

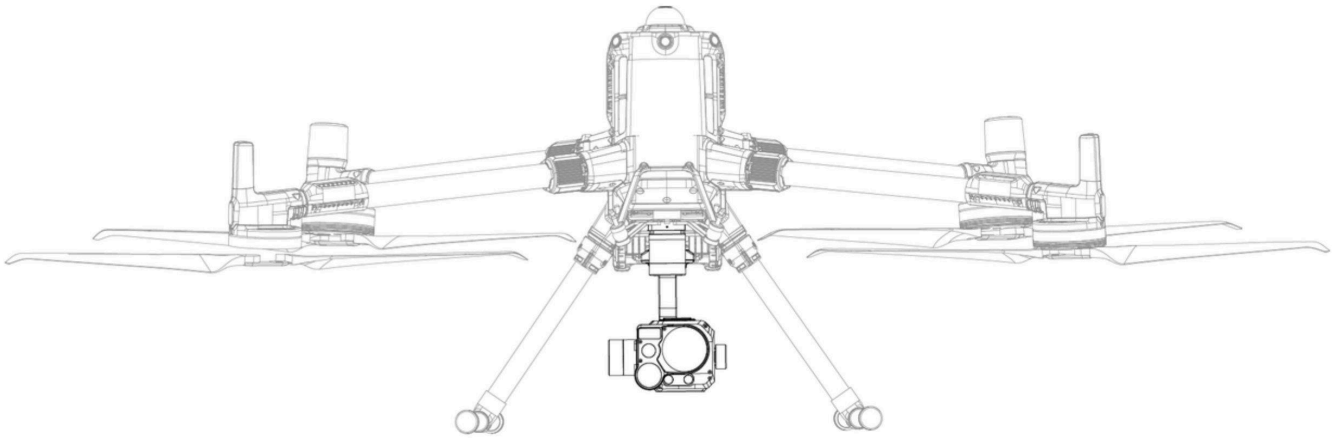

4. After powering on the remote controller and UAV, the MetScan V1 gimbal should automatically face forward. Open the DJI Pilot 2 app on the remote controller and confirm that MetScan V1 is recognized correctly (left image) and that the dual-camera view and PSDK controls are displayed (right image).



- Section 6 and 7 provide detailed explanations of the functions and operation of the PSDK controls.
- MetScan V1 is set to the commonly used Belt Scan Mode by default. If it is set to Sector Scan or Expert / Custom mode, the PSDK controls will differ from those shown in the figure on the right.

5. Binding MetScan V1 to AIRINS.ai

AIRINS.ai login portal: https://airins.ai

AIRINS.ai operates four independent regional servers in Europe (EU), the United States (US), China (CN) and Singapore (SG). These servers are isolated from one another and do not share data, helping customers meet regional regulatory and data-compliance requirements.

AIRINS.ai user guide: https://learning.airins.com

5.1 Creating an AIRINS.ai Account (Already Have One? Skip This Section)

1. Open your browser, navigate to the AIRINS.ai website (https://airins.ai), and choose your regional server.

2. On the Log In / Sign Up page, enter a valid email address and click "Log In / Sign Up".

3. Enter a valid invitation code and click "Submit". If you do not have an invitation code, contact your assigned AIRINS sales engineer. Each invitation code can be used only once.

4. Check your email inbox for the 6-digit verification code, then enter it on the page.

5. Set a login password (recommended: at least 8 characters, including letters and numbers).

6. Enter your basic information (Person Name / Organisation), then click "Submit". You can now log in to AIRINS.ai using your email and password.

- If you do not receive the verification code, check your spam folder or click "Resend Verification Code".
- Register using a frequently used, secure email address to facilitate future account recovery.
- The "Person Name" and "Organisation" fields will be included automatically in future reports.
- The login password, organisation/company name, personal name, and other account details can be updated at any time on the AIRINS.ai account settings page.

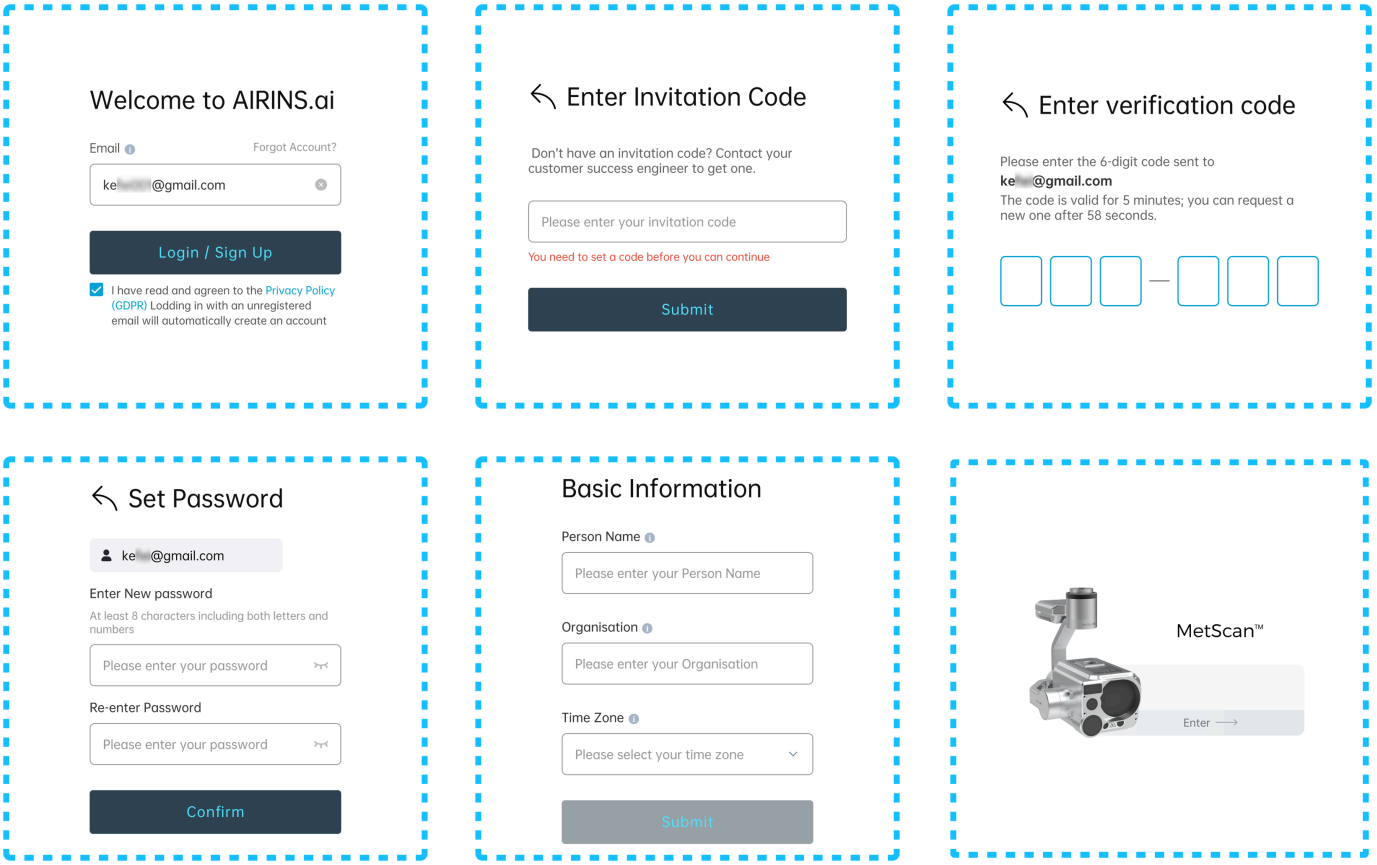

5.2 Binding MetScan V1 to Your AIRINS.ai Account

1. Log in to the AIRINS.ai web portal using your registered email and password.

2. On the AIRINS.ai home page:

- If no MetScan V1 is currently linked to your AIRINS.ai account, click the "Bind Device" button under the "Real-Time" section on the left panel.
- If other MetScan V1 devices are already linked to your AIRINS.ai account, click "Switch Device" at the top of the left panel to open the pop-up window, then click the "Bind Device" button.

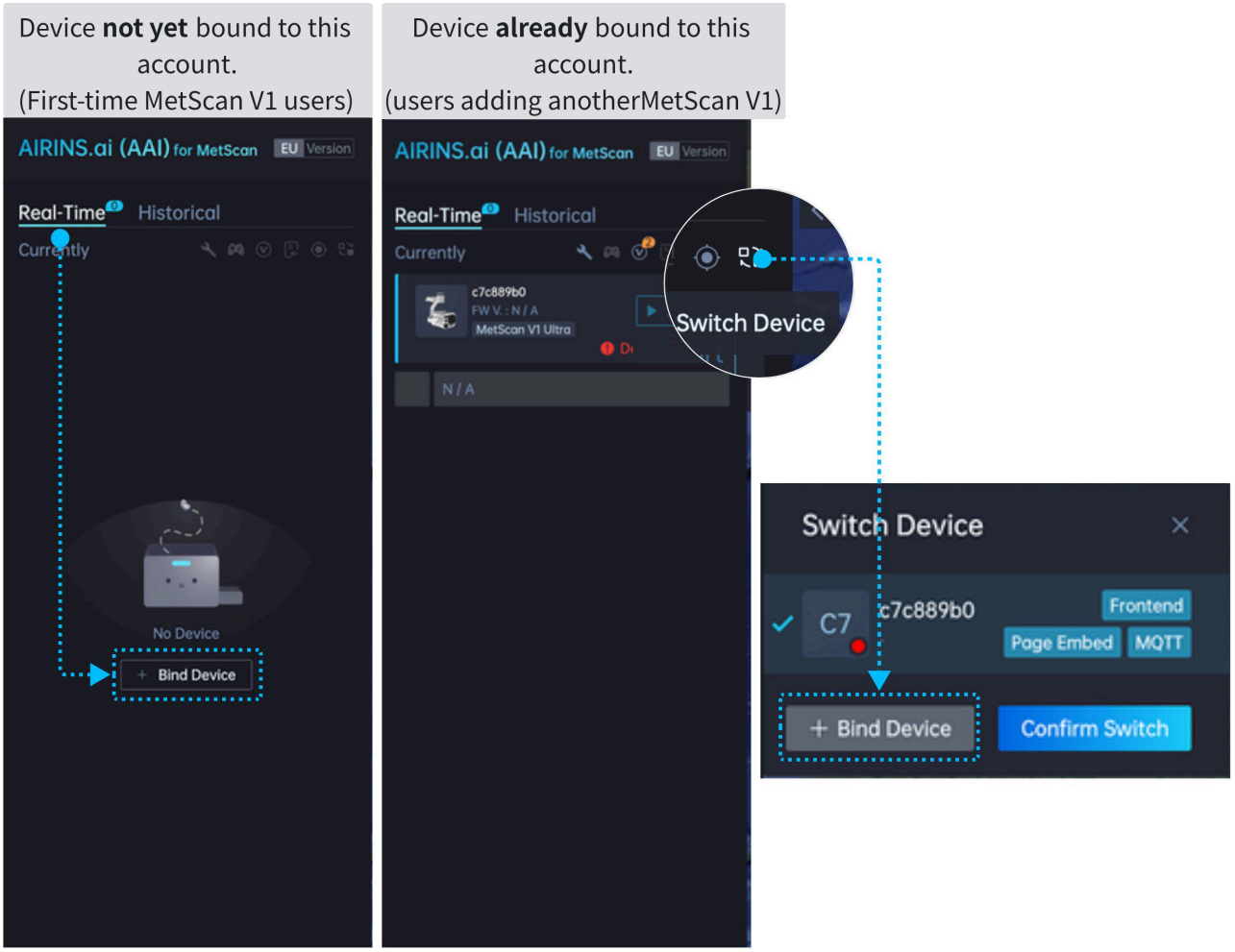

3. Enter the MetScan V1 serial number in the input field and assign a nickname to the device for easier management and identification. The serial number can be found in either of the following locations:

- On the lower-left corner of the label on the side of MetScan V1.
- In DJI Pilot 2 app's Payload Settings, enable "Show Device Info", then view the Serial Number in the PSDK pop-up window.

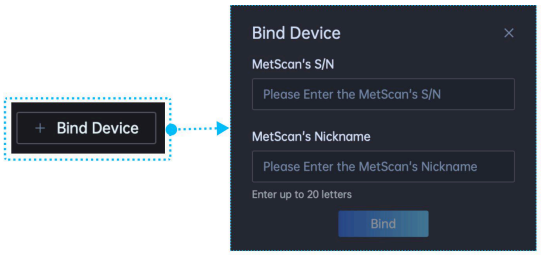

Check the Serial Number on the lower-left corner of the MetScan V1 label.

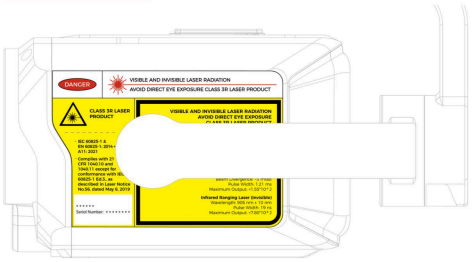

Check the Serial Number in the PSDK pop-up window.

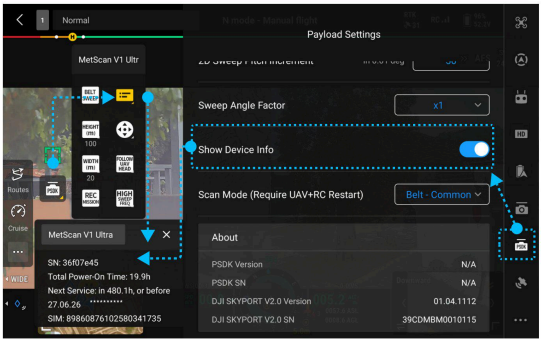

4. Click "Bind". After the device is bound successfully, its information will appear in the "Real-Time" interface.

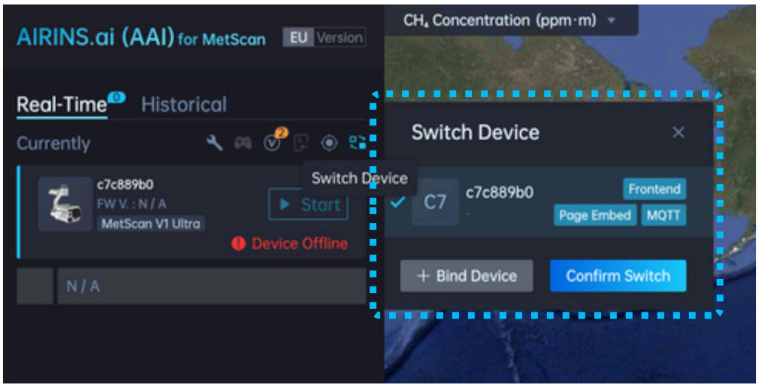

- The device serial number is a unique identifier consisting of an 8-character hexadecimal string. All letters are in lowercase, and "0" always refers to the number zero, not the letter "o".
- In rare cases, a red "Frontend service not enabled" status may appear after MetScan V1 is bound. Contact your assigned AIRINS sales engineer to activate AIRINS.ai access.

5.3 Updating MetScan V1 Firmware to the Latest Version

> **Important:** Firmware updates require a network connection. Ensure that MetScan V1 is within a 4G coverage area and that the installed SIM card has an active data plan.

1. Follow the steps in Section 4 to install the MetScan V1 on the UAV and power it on.

2. Log in to AIRINS.ai and enter the main page.

3. Click "Firmware Update" under the "Real-Time" section in the upper-left panel to view the current firmware version details of MetScan V1.

4. Check whether the current firmware version of the MetScan V1 is the latest available version.

5. If the firmware is not up to date, use the "Firmware Update" function within AIRINS.ai to update it to the latest version.

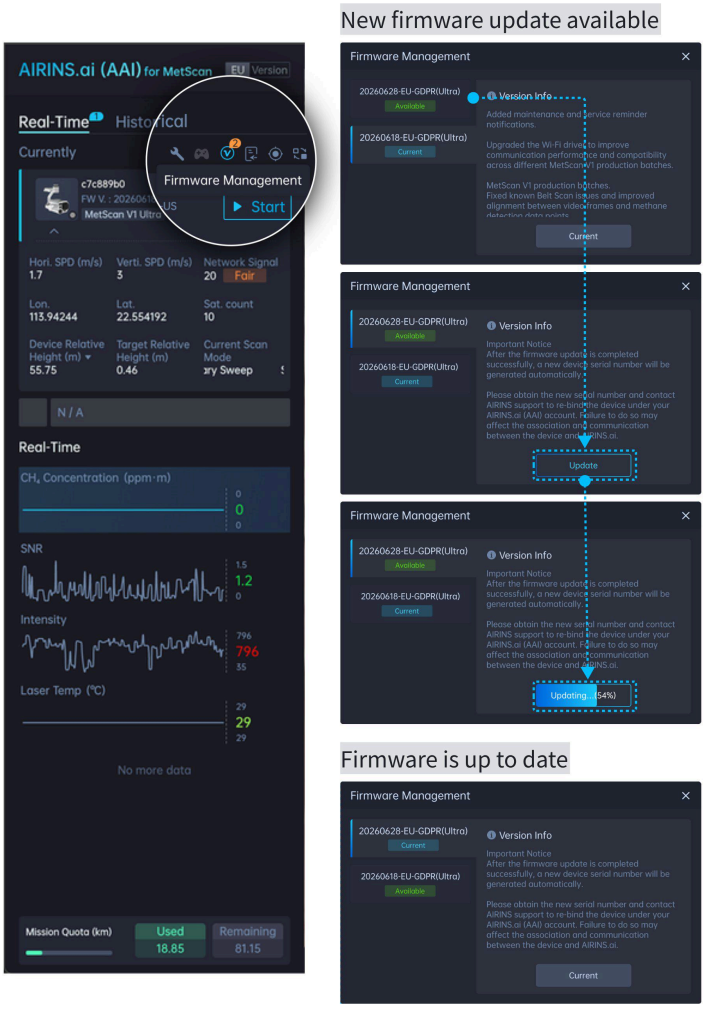

5.4 AIRINS.ai Detailed Tutorial

For detailed guidance, click the link below to access AIRINS.ai tutorials and other learning resources.

AIRINS.ai Detailed Tutorial

6. Executing a Belt Scan Mission

Belt Scan Illustration:

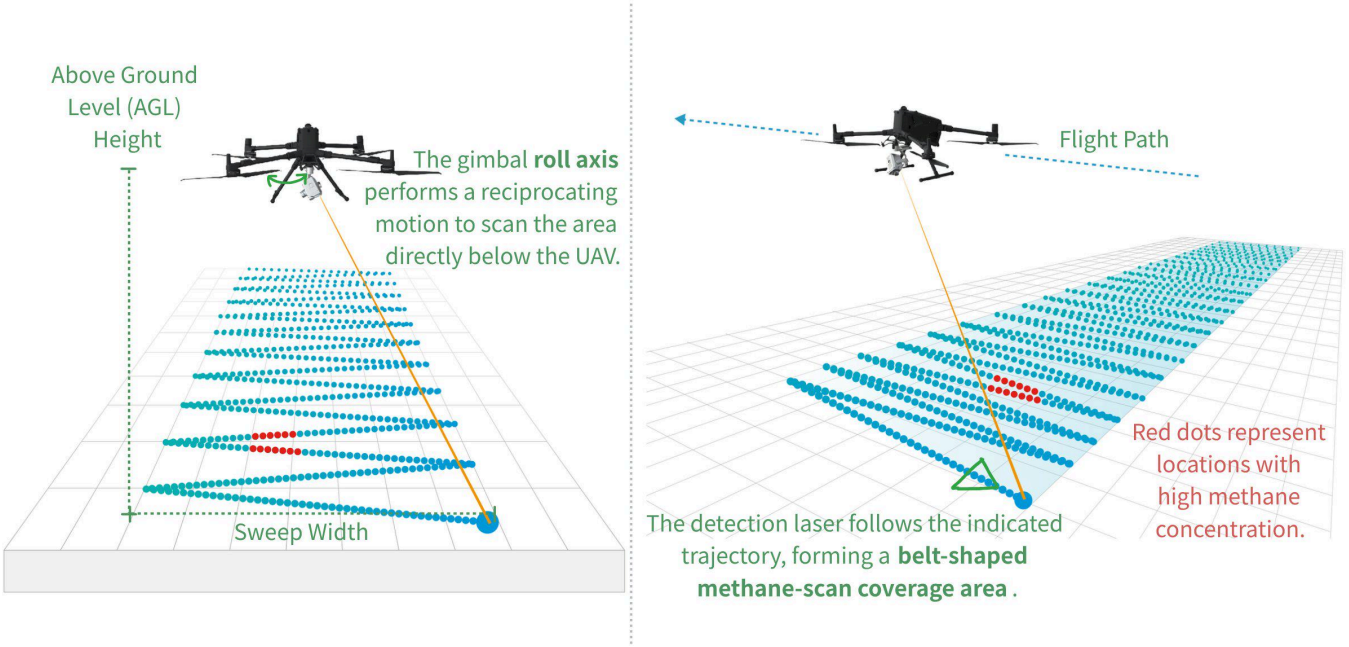

Belt Scan Mode is suitable for:

- Flying the drone directly above natural gas pipelines to perform leakage screening.
- Flying **within a facility boundary** to screen on-site equipment and infrastructure for methane leaks.

6.1 Manual Flight

1. Upon arrival at the work site, strictly follow the installation steps described in Section 4 of this document:
    - Install the MetScan V1 onto the UAV, then power on the UAV and remote controller.
    - In the DJI Pilot 2 app interface, verify that communication between the MetScan V1 and the UAV is functioning properly.

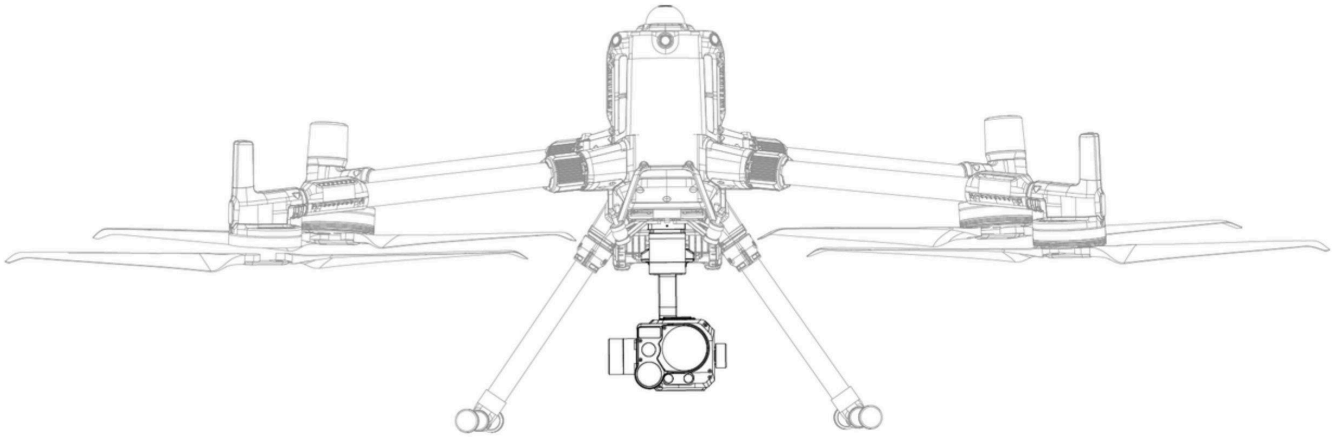



2. From the menu in the upper-right corner of the flight interface, navigate to the "Payload Settings" and verify that "Scan Mode" is set to "Belt – Common". If it is already selected, there is no need to restart the UAV. If a different scan mode is selected, restart both the UAV and the remote controller.

- The default scan mode of MetScan V1 when it is shipped out is "Belt – Common".
- If the scan mode is changed without restarting the UAV and remote controller, the PSDK controls may not display correctly. Restart both devices after changing the scan mode.

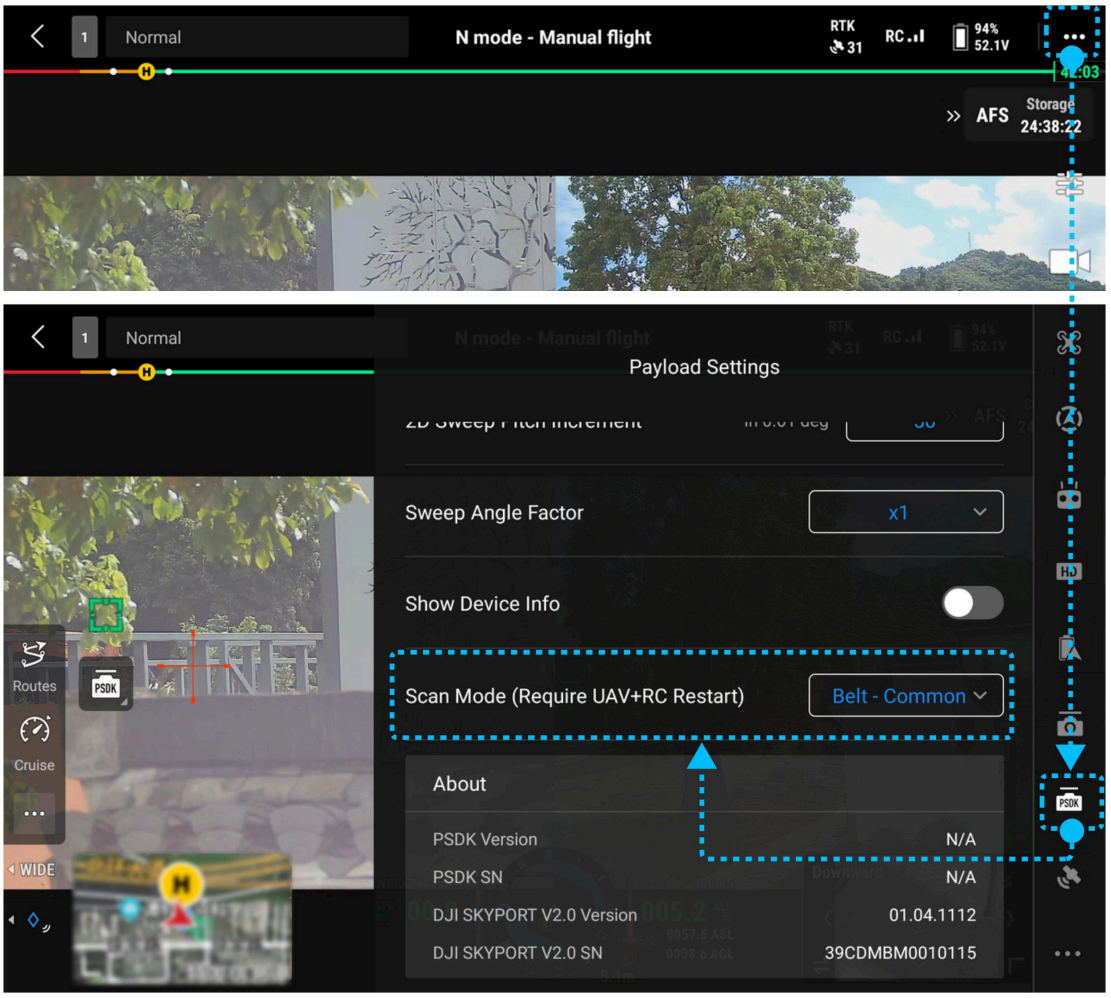

3. Click the "PSDK" icon in the flight interface to open the MetScan V1 PSDK controls. The status and function of each icon are described in the table below. Review these functions carefully before operation.

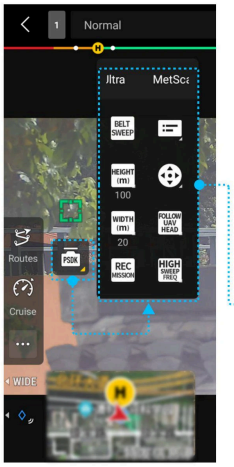

MetScan V1 "Belt Scan" PSDK Controls		
Controls	**Status**	**Descriptions**
Belt (Left-Right) Sweep		When the icon is "yellow", it indicates that Belt Scan is **enabled**, and the MetScan gimbal roll axis should perform periodic sweeping motion.
		When the control icon is "grey", it indicates that Belt Scan is **disabled**, and the user can manually control the gimbal motion.
Planned Flight Height (m)		Set the planned flight height above ground for this mission. This parameter is used to calculate the gimbal roll axis sweep angle. If it is set incorrectly, the actual Belt Scan width will differ from the planned width.
Planned Sweep Width (m)		Set the planned Belt Scan sweep width for this mission. This parameter is used to calculate the gimbal roll axis sweep angle. If it is set incorrectly, the actual Belt Scan width will differ from the planned width.
Start/End Mission Record		When the icon is "yellow", it indicates that mission data and video recording are **enabled** (*.airins, *.mp4).
		When the icon is "grey", it indicates that mission data and video recording are **disabled** (*.airins, *.mp4).
PSDK Pop-Up Window Display		When the icon is "yellow", it indicates that the device pop-up window is **enabled**. It is strongly recommended to enable the pop-up window during the mission to monitor the MetScan V1 operating status.
		When the icon is "grey", it indicates that the device pop-up window is **disabled.**
MetScan Gimbal Touch Control Panel		When the icon is "yellow", it indicates that the gimbal control toggle is **enabled**.
		When the icon is "grey", it indicates that the gimbal control toggle is **disabled**.
MetScan Gimbal Heading Control		You can select either (1) automatic follow the UAV head (default) or (2) manual heading control mode, where the gimbal's heading can be freely controlled using the right wheel on the remote controller or the gimbal touch control panel.
Sweep Frequency		Set the left-right sweep frequency of the MetScan gimbal corresponding to different recommended flight speeds.

If you are using MetScan's Belt Scan mode for the first time, it is recommended to perform the following tests while the UAV is on the ground:

- Turn belt sweep on and off;
- Adjust the planned sweep width;
- Adjust the planned flight height;
- Start and end mission recording.

Observe how MetScan moves and the interface changes in DJI Pilot 2 app to better understand how Belt Scan operates.

4. Before starting a Belt Scan mission, configure the MetScan parameters according to the actual flight requirements:
    - **Planned flight height (m)**
        - For example, if the UAV will fly 70 m above ground level, set this value to 70 m.
        - This value refers to the actual height above ground level, not the height above the takeoff point.
        - The recommended flight height is 30–120 m. A lower flight height improves methane-plume detection sensitivity.

- **Planned sweep width (m)**
  - For example, to cover a 10 m corridor along the flight path (5 m on each side), set this value to 10 m.
  - The recommended sweep width is 5–15 m. A wider sweep reduces data-point density and increases the likelihood of missing emission sources.
- **Sweep frequency (based on planned flight speed)**
  - For example, if the UAV is planned to fly at 3 m/s, set the sweep frequency to "High".
  - Higher flight speed and sweep frequency increase the area covered per unit time.
  - Lower flight speeds and sweep frequencies improve scan resolution, detection sensitivity, and accuracy.

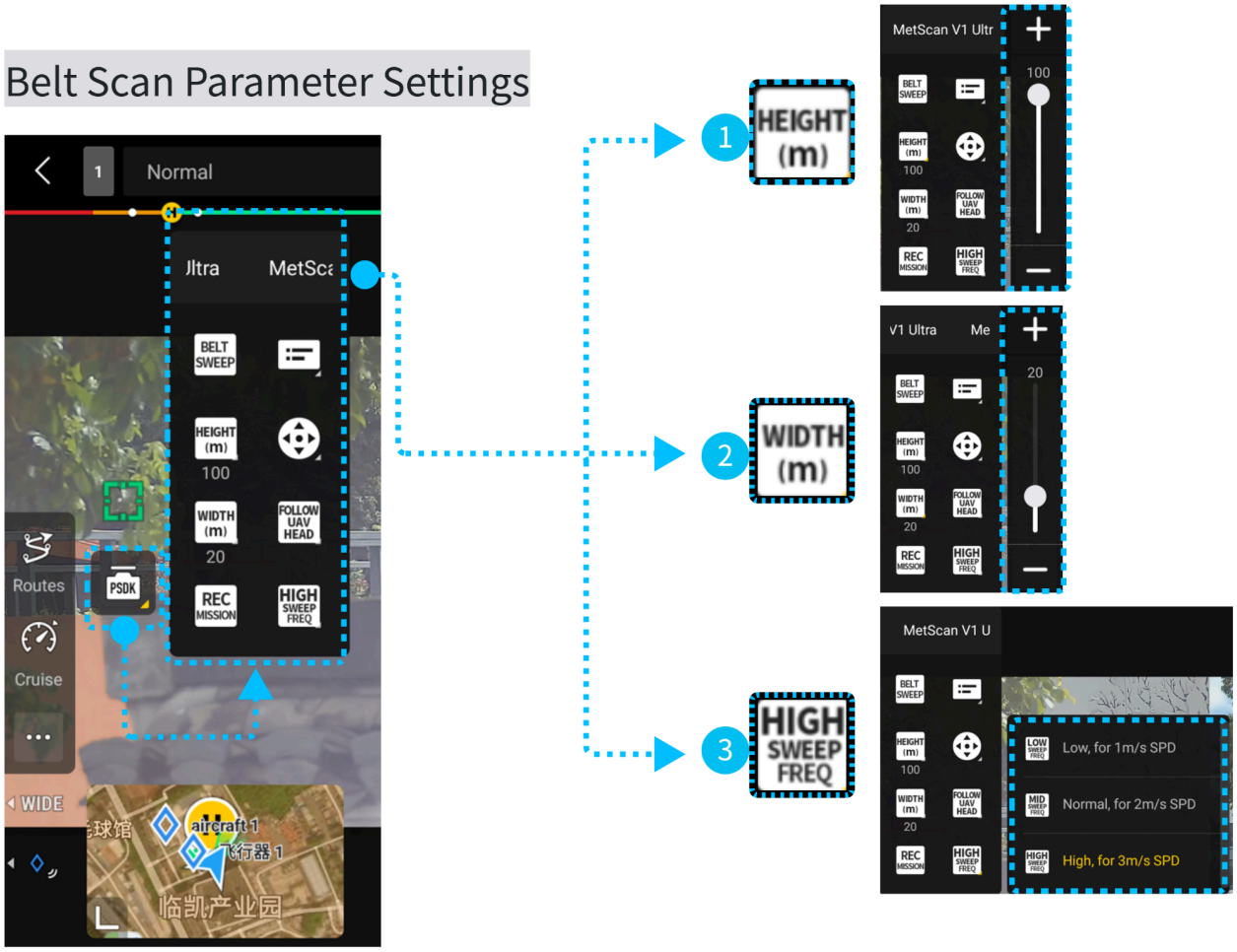

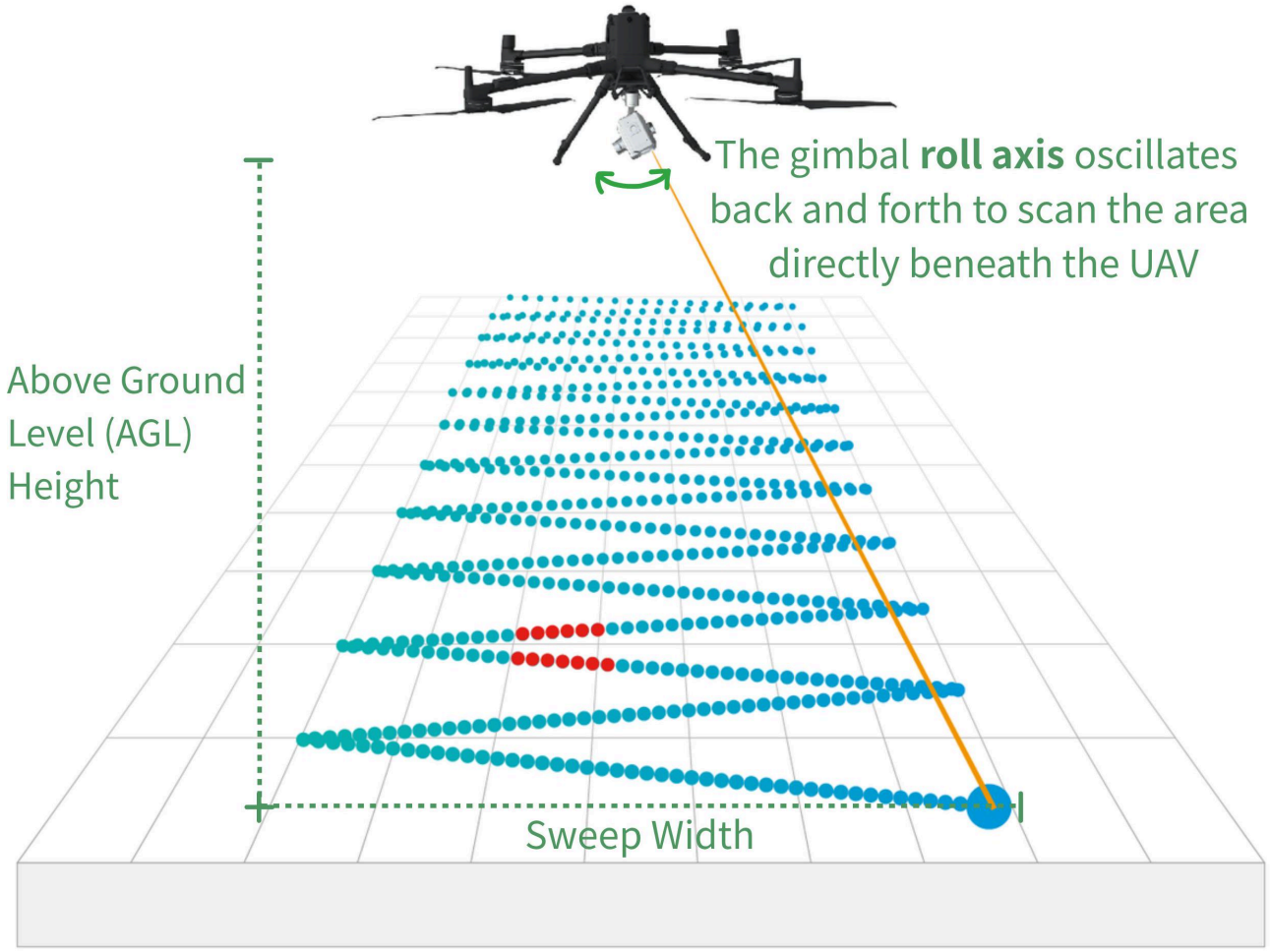

5. Take off the UAV, fly to the mission starting point, and adjust to the planned flight height. Click "Belt Sweep" in the PSDK control panel to enable the scan mode, then click "Rec Mission" to start recording the Belt Scan mission. At this point, both the "Belt Sweep" and "Rec Mission" icons should be in yellow, and the pop-up window should display "Data Disk: REC".

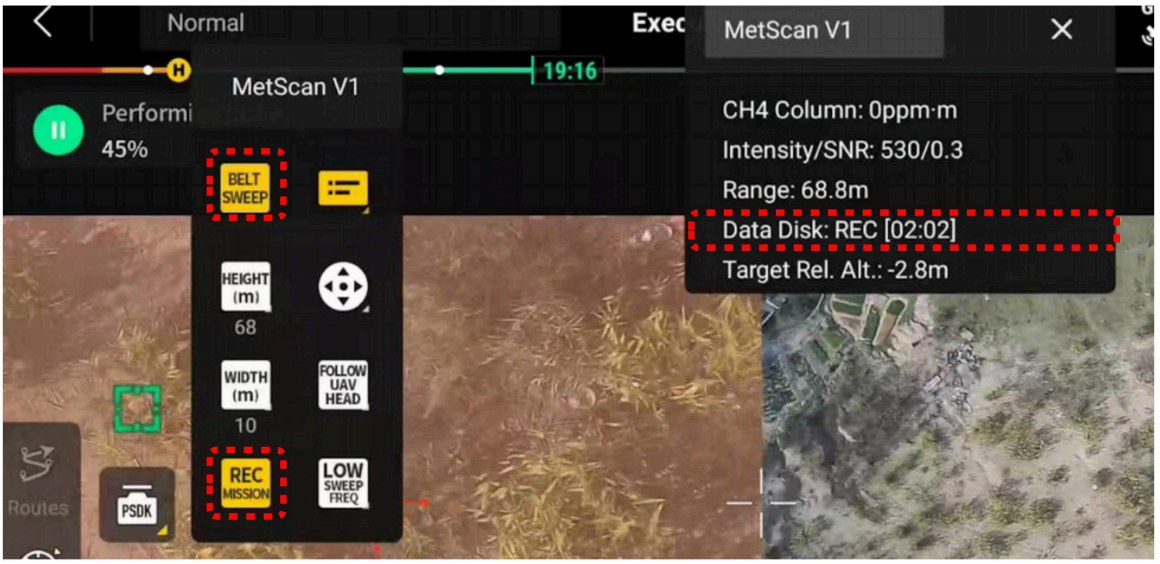

6. Operate the UAV and strictly follow the procedures below to cover the target area.

    1. Maintain the planned height above ground, using manual or automatic terrain following if necessary.

2. Maintain the planned flight speed and fly at a constant speed along the UAV heading direction.

3. After completing the mission, click "Belt Sweep" in the PSDK control panel to exit the scan mode, then click "Rec Mission" to stop mission recording.

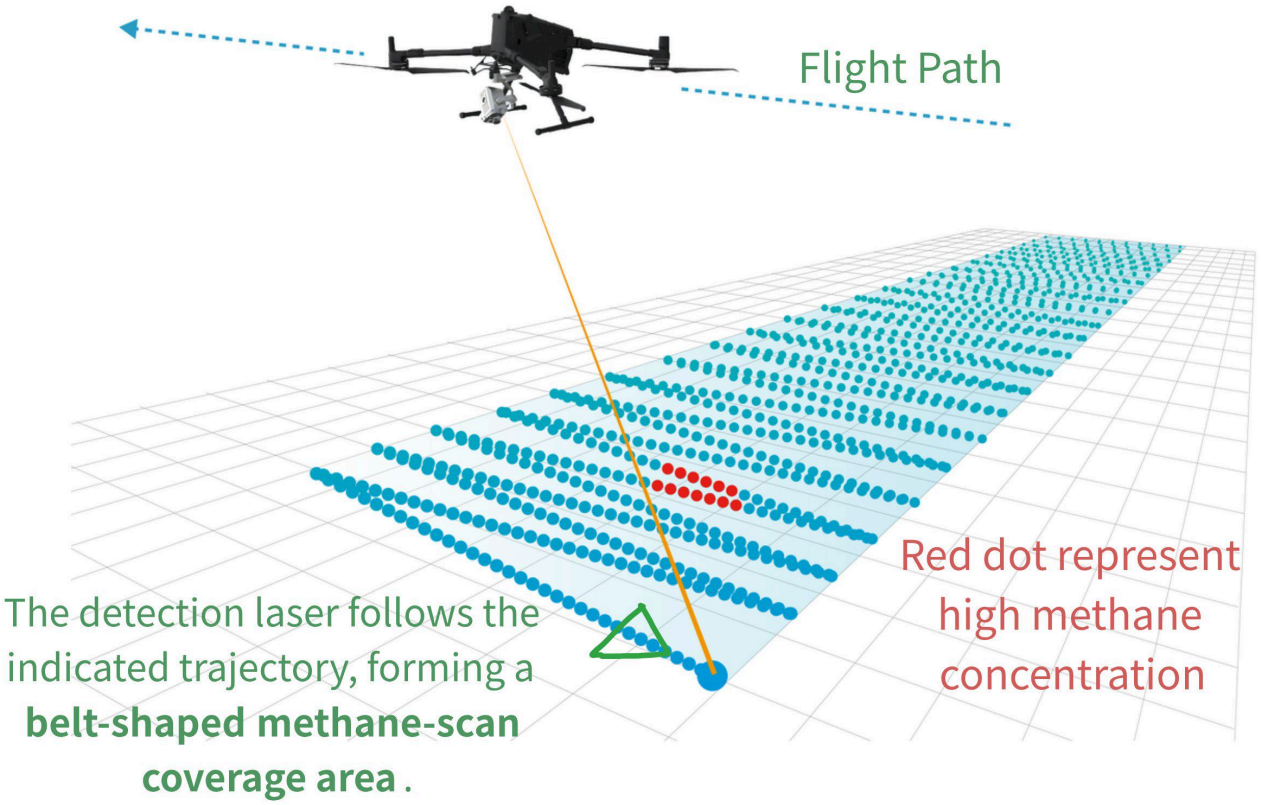

7. With a stable 4G connection, missions can be monitored in real time through the "Real-Time" interface in AIRINS.ai.

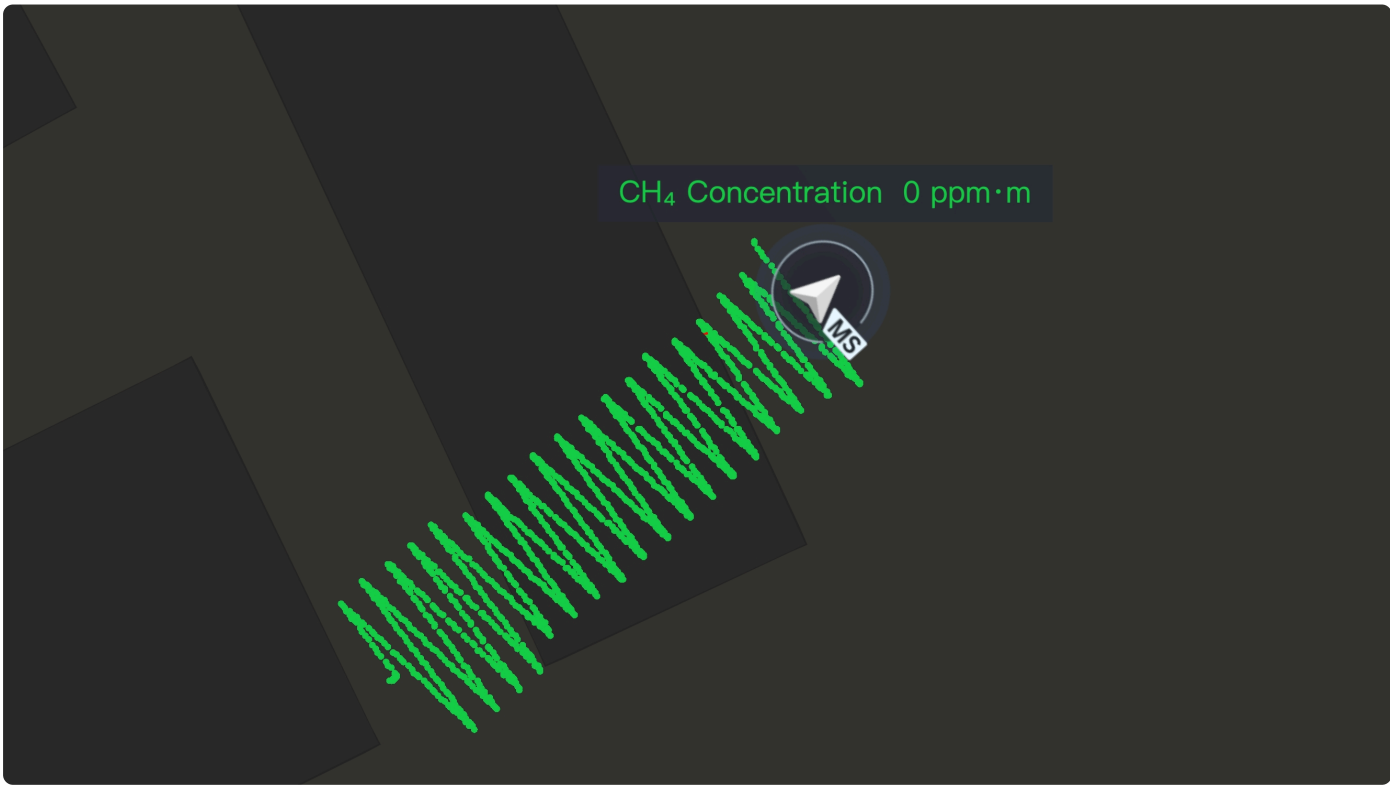

8. After the mission is completed, refer to Section 8 of this document to synchronize the video generated from this Belt Scan mission to AIRINS.ai for further analysis.

6.2 Waypoint Flight (example based on DJI Matrice 400 and DJI Pilot 2 App)

❗
- Before proceeding, ensure that you have reviewed and understood Section 6.1.
- Before planning an automated waypoint mission in DJI Pilot 2 app, **perform a Belt Scan mission manually as described in Section 6.1 to verify that the sweep parameters achieve the desired results**, then only refer to this section to plan the automated waypoint mission.
- This section (Section 6.2) requires a thorough understanding of Section 7.3 "Flight Tasks" in the DJI Matrice 400 User Manual. Review and understand the DJI Matrice 400 User Manual before proceeding with this section.

💡 Once a waypoint mission has been verified to operate correctly, it can be reused repeatedly for periodic methane leak scanning at fixed locations.

1. Upon arrival at the work site, strictly follow the installation procedures in Section 4 of this document:
   - Mount the MetScan V1 on the UAV, then power on the UAV and remote controller;
   - In the DJI Pilot 2 app interface, verify that communication between the MetScan V1 and the UAV is functioning normally;
   - Ensure that Scan Mode is set to "Belt – Common".

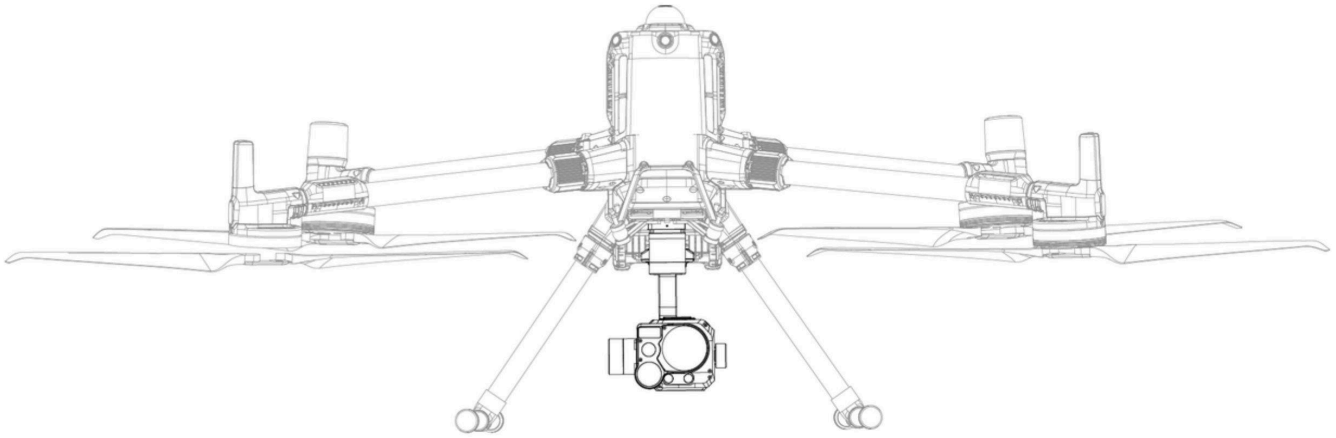

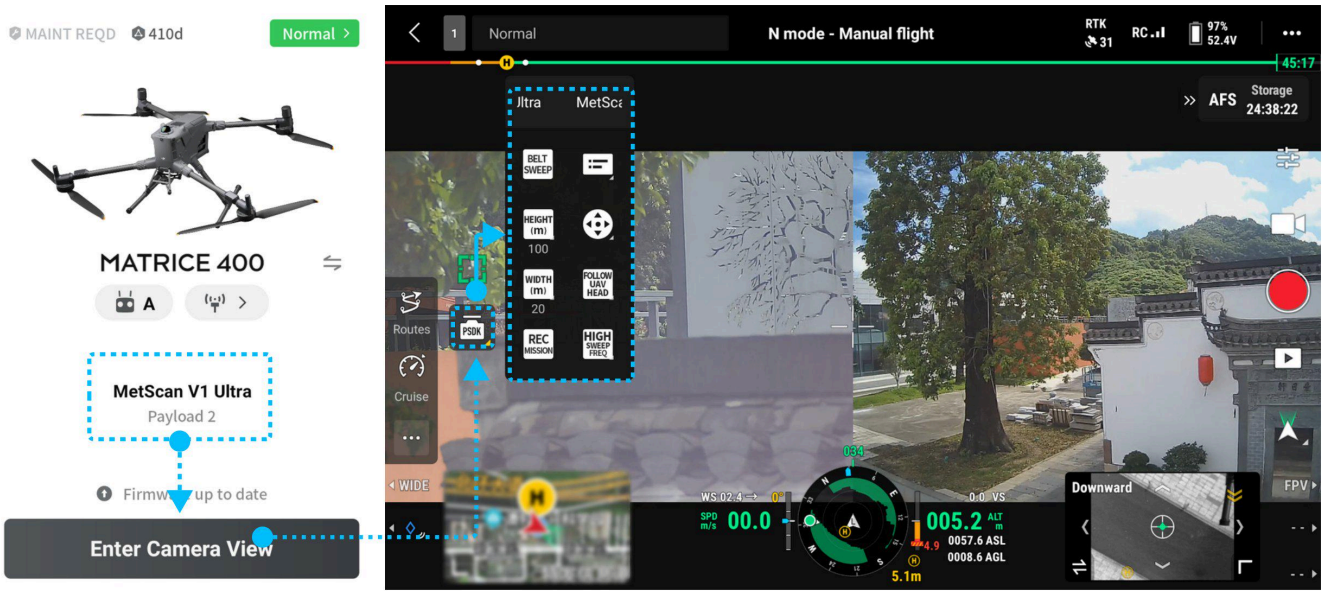

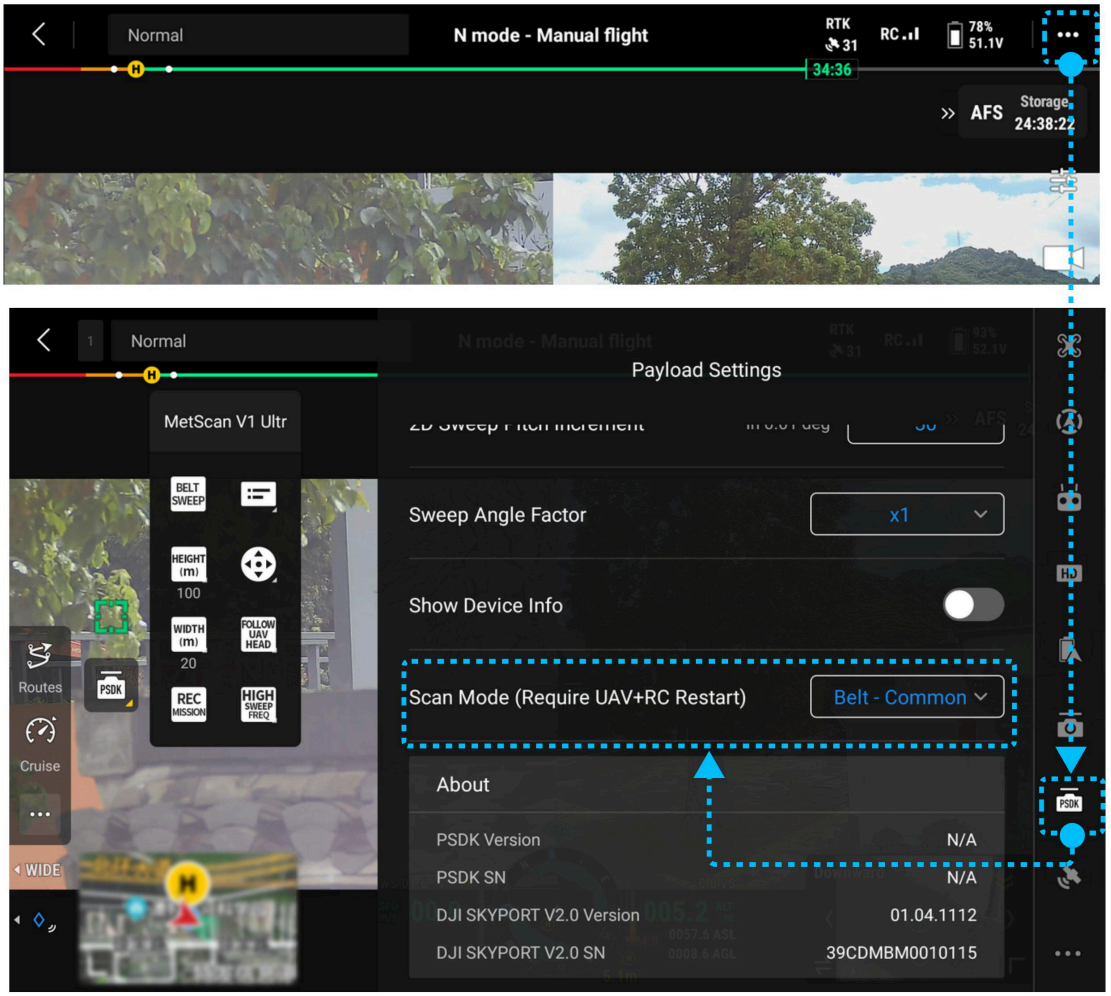

2. In DJI Pilot 2 app, click "Flight Route" to enter the route library, then select "Create a Route" → "Waypoint Route" → "Set Waypoints" to create a new mission and ensure the payload is correctly selected as MetScan V1.

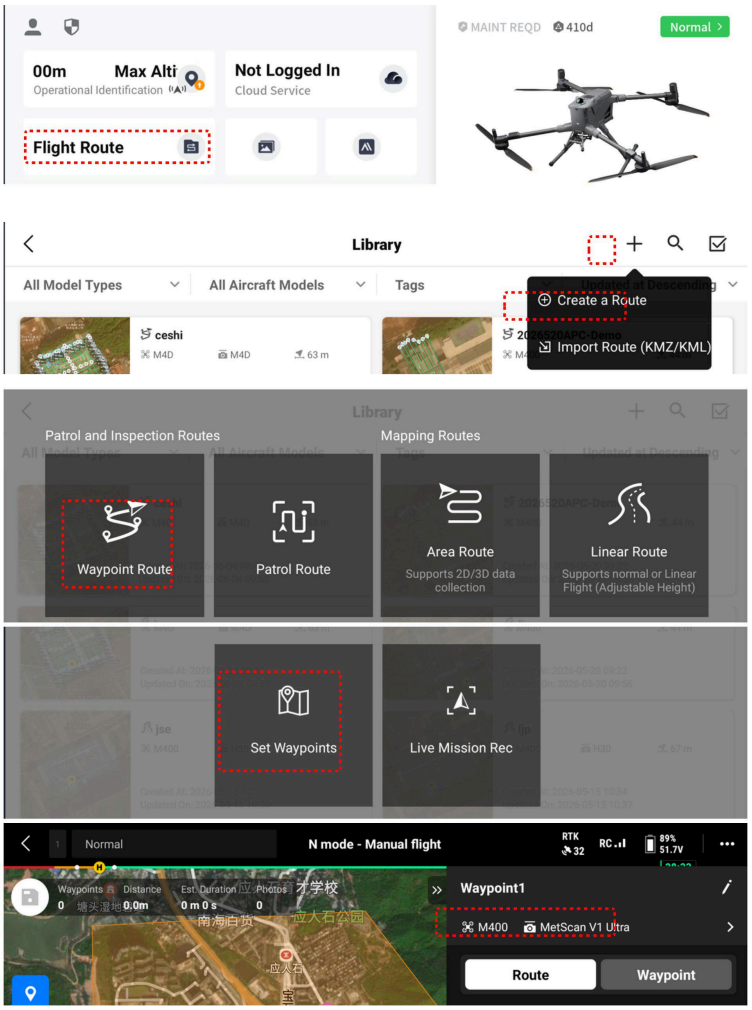

> You may also import waypoints using a KMZ / KML file. However, the flight altitude, flight speed, and waypoint actions must still comply with MetScan's requirements.

3. Set waypoints individually above the area to be scanned (for example, along a natural gas pipeline). For each waypoint, ensure the correct height above ground is set, and configure the Aircraft Yaw to "Follow Route."
4. After all waypoints have been set, configure the following MetScan V1 actions **at the first waypoint where Belt Scan will start**. These actions do not need to be repeated at subsequent waypoints:
    - "Flight Height" (must match the actual height above ground);
    - "Swath Width";
    - "Sweep Frequency" (must match with flight speed);
    - "ON-Sweep Mode";
    - "ON-REC Mission".

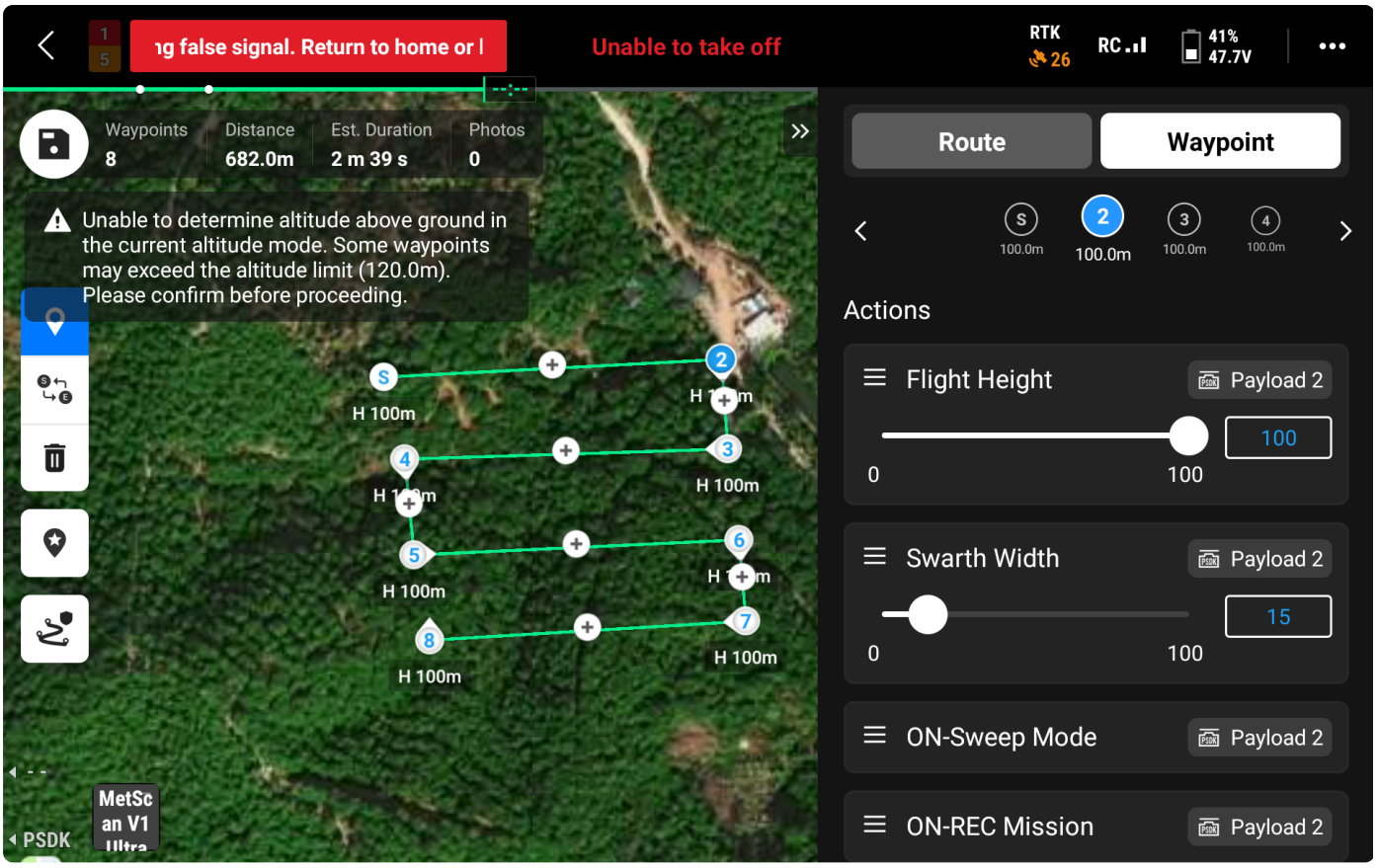

5. **At the waypoint where Belt Scan is required to end,** set the payload (MetScan V1) waypoint actions, including:
   - "OFF-REC Mission";
   - "OFF-Sweep Mode".

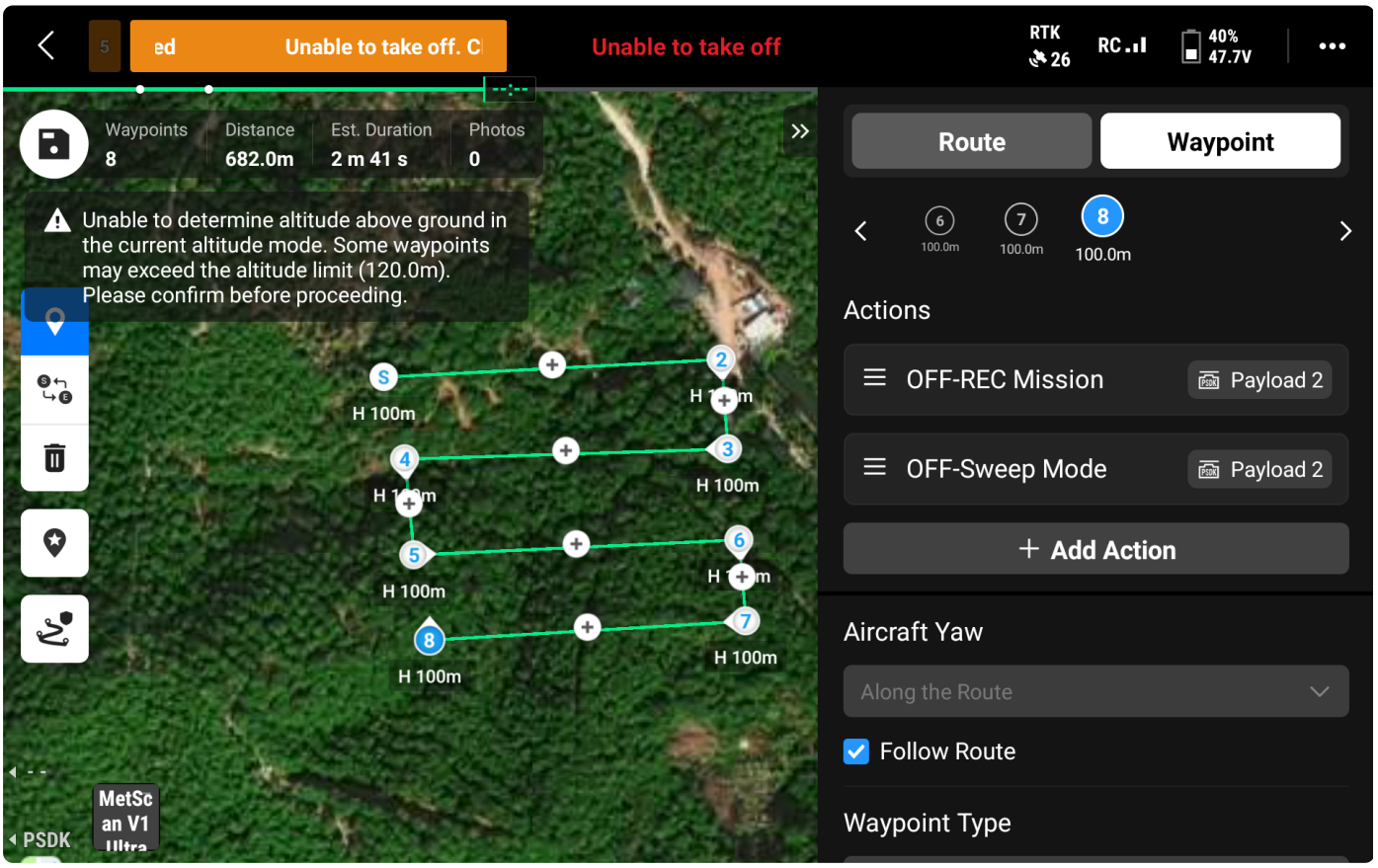

6. Execute the waypoint mission at a flight speed consistent with the configured "Sweep Frequency" and evaluate its performance. Optimize the waypoint mission if necessary. With a stable 4G connection, the mission can also be monitored in real time through the "Real-Time" interface in AIRINS.ai.

> ❗ If the final waypoint flight speed (1–3 m/s) does not match the configured "Sweep Frequency," the laser point cloud may become sparse, increasing the false-alarm or missed-alarm rate.

7. After the mission is completed, refer to Section 8 of this document to synchronize the video generated from this Belt Scan mission to AIRINS.ai for further analysis.

7. Executing a Sector Scan Mission

Sector Scan illustration:

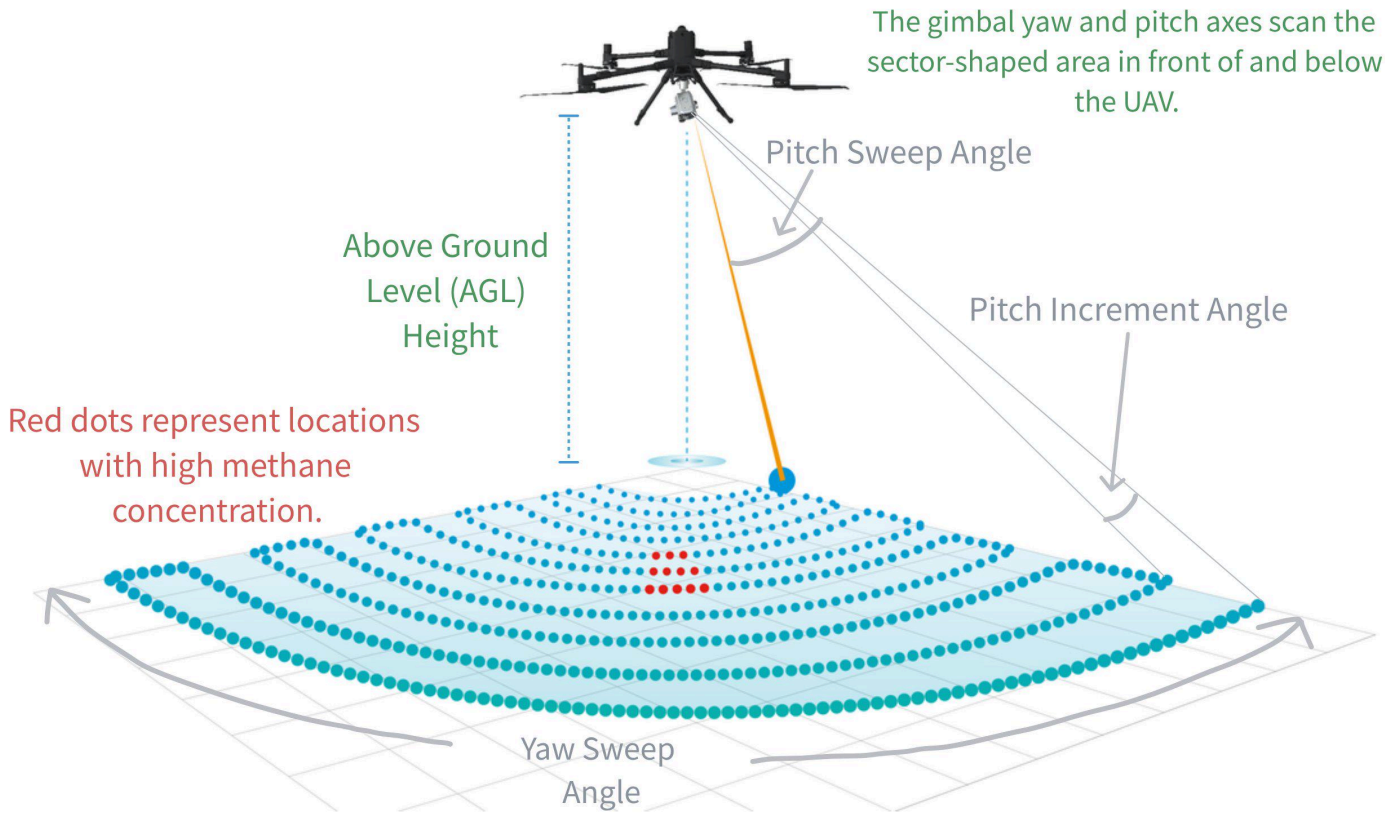

> ❗ **Sector Scan Mode is suitable for:**
>
> Hovering the UAV **outside the facility boundary** or hazardous area to screen the facility for methane leaks.

7.1 Manual Flight

1. Upon arrival at the work site, strictly follow the installation steps described in Section 4 of this document:

- Install the MetScan V1 onto the UAV, then power on the UAV and the remote controller.
- In the DJI Pilot 2 app interface, verify that communication between the MetScan V1 and the UAV is functioning properly.

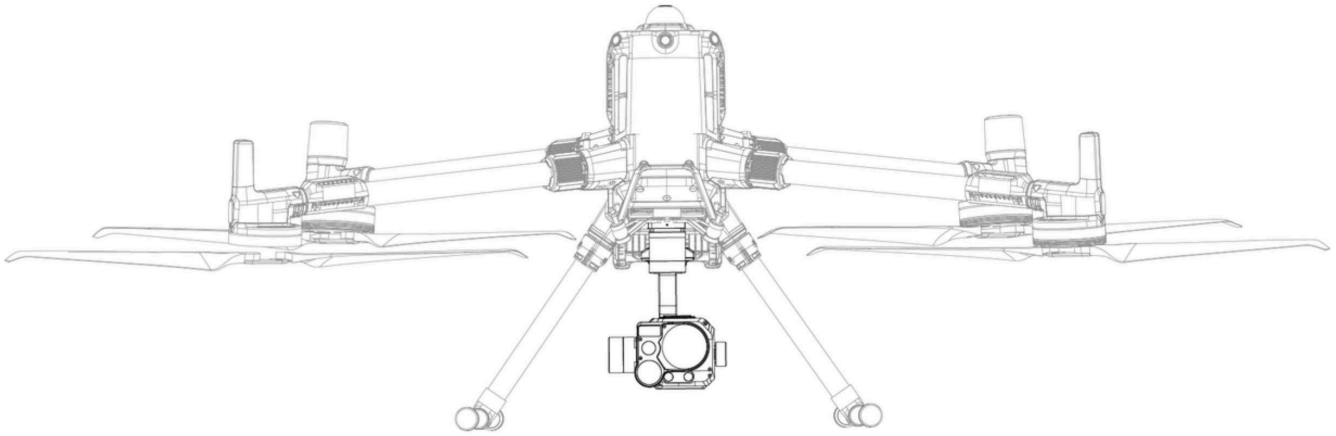



2. From the menu in the upper-right corner of the flight interface, navigate to the "Payload Settings" and verify that "Scan Mode" is set to "Sector". If it is already selected, there is no need to restart the UAV. If a different scan mode is selected, change it to "Sector" and restart both the UAV and the remote controller before proceeding.

> - If the scan mode is changed without restarting the UAV and remote controller, the PSDK controls may not display correctly. Restart both devices after changing the scan mode.
> - Sector Scan Mode is supported only on MetScan V1 Ultra and is not available on MetScan V1 Standard.

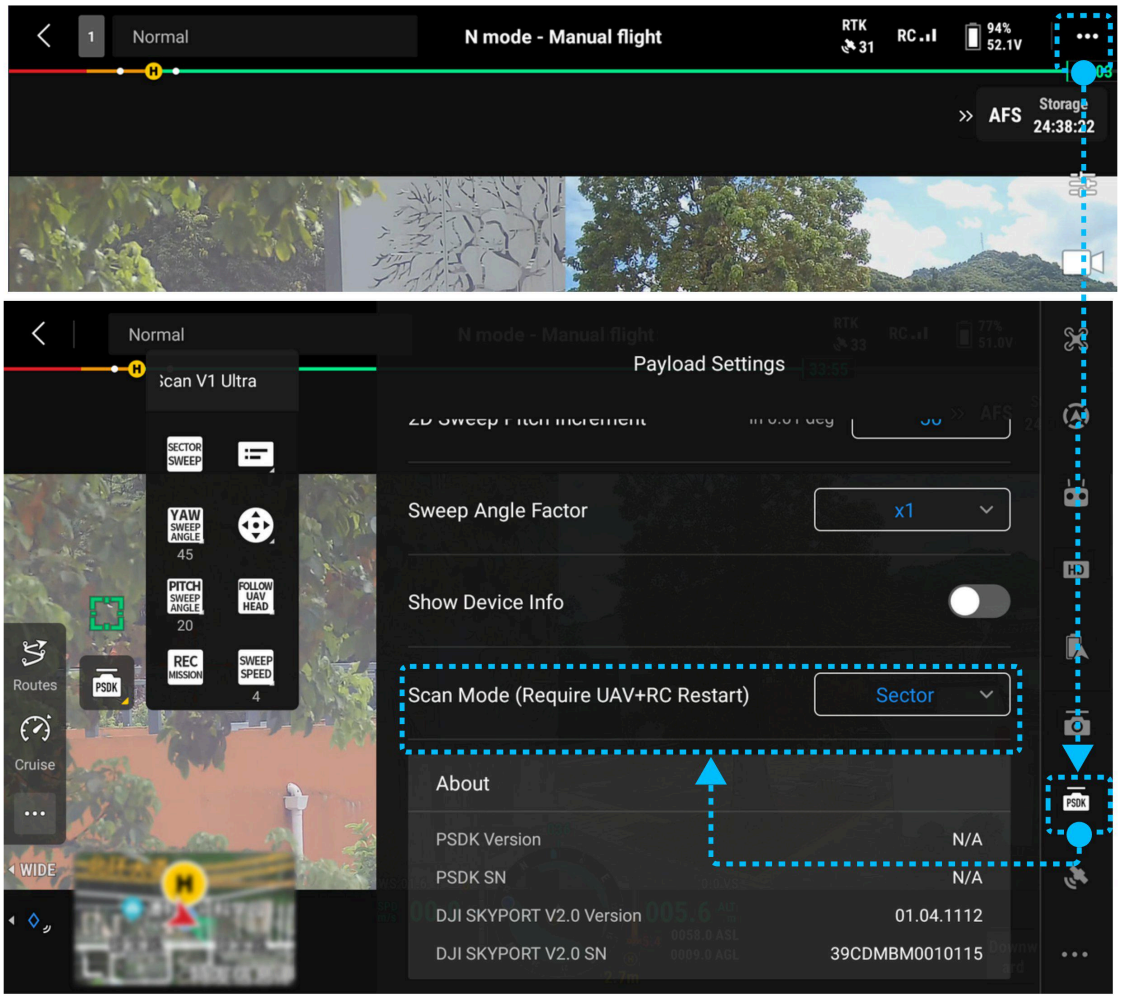

3. Click the "PSDK" icon in the flight interface to open the MetScan V1 PSDK controls. The status and function of each icon are described in the table below. Review these functions carefully before operation.

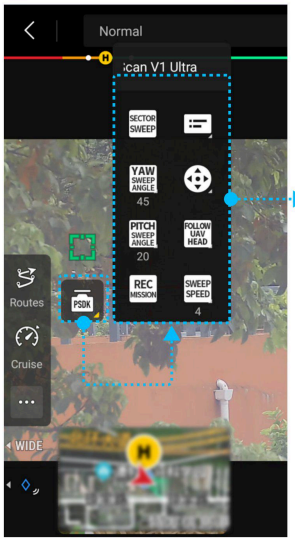

MetScan V1 "Sector Scan" PSDK Controls		
Controls	**Status**	**Descriptions**
Sector Sweep		When the icon is "yellow", it indicates that Sector Scan is **enabled**, and the MetScan gimbal yaw and pitch axis should perform periodic sweeping motion.
		When the control icon is "grey", it indicates that Sector Scan is **disabled**, and the user can manually control the gimbal motion.
Yaw Sweep Angle (°)		Set the yaw angle coverage range for Sector Scan (from front-left to front-right).
Pitch Sweep Angle (°)		Set the pitch angle coverage range for Sector Scan (from far to near).
Start/End Mission Record		When the icon is "yellow", it indicates that mission data and video recording are **enabled** (*.airins, *.mp4).
		When the icon is "grey", it indicates that mission data and video recording are **disabled** (*.airins, *.mp4).
PSDK Pop-Up Window Display		When the icon is "yellow", it indicates that the device pop-up window is **enabled**. It is strongly recommended to enable the pop-up window during the mission to monitor the MetScan V1 operating status.
		When the icon is "grey", it indicates that the device pop-up window is **disabled**.
MetScan Gimbal Touch Control Panel		When the icon is "yellow", it indicates that the gimbal control toggle is **enabled**.
		When the icon is "grey", it indicates that the gimbal control toggle is **disabled**.
MetScan Gimbal Heading / Yaw Control		You can select either (1) automatic follow the UAV head (default) or (2) manual heading control mode, where the gimbal's heading can be freely controlled using the right wheel on the remote controller or the gimbal touch control panel.
Sweep Speed (°/s)		Set the angular sweep speed of the gimbal yaw axis for Sector Scan.

If you are using MetScan's Sector Scan Mode for the first time, it is recommended to perform the following tests while the UAV is on the ground:

- Turn sector sweep on and off;
- Adjust the gimbal yaw sweep angle;
- Adjust the gimbal pitch sweep angle;
- Adjust the Sector Scan sweep speed;
- Adjust the initial gimbal pitch angle (the angle you point MetScan towards the ground right before you start Sector Scan);
- Start and end scan mission recording (MetScan will outline the Sector Scan boundary two times before starting actual line-by-line scanning).

Observe how MetScan moves and the interface changes in DJI Pilot 2 app to better understand how Sector Scan operates.

4. Take off the UAV and fly to the mission location, then adjust the hover height to 30–120 m based on actual conditions. Set the UAV and MetScan parameters according to the requirements of the scanning mission:

- **UAV Hovering Heading (°)**
  - The UAV heading should be towards the center of the scan area.
- **MetScan's Initial Gimbal Pitch Angle (°)**
  - Adjust manually using the left control wheel on the remote controller. The MetScan telephoto view crosshair should be positioned at the lower-center of the scan area.
  - Adjust the hover height so that the initial gimbal pitch angle is 65–75°.
- **MetScan's Gimbal Yaw Sweep Angle (°)**
  - Determines the horizontal angular coverage from front-left to front-right.
- **MetScan's Gimbal Pitch Sweep Angle (°)**
  - Determines the vertical angular coverage from far to near; ideally within 10–30°.
- **MetScan's Sector Scan Angular Sweep Speed (°/s)**
  - Controls the angular speed of the gimbal yaw movement. A higher speed shortens the scan duration, while a lower speed improves methane-detection sensitivity.
  - In most cases, the recommended angular sweep speed range is 1-5°/s.

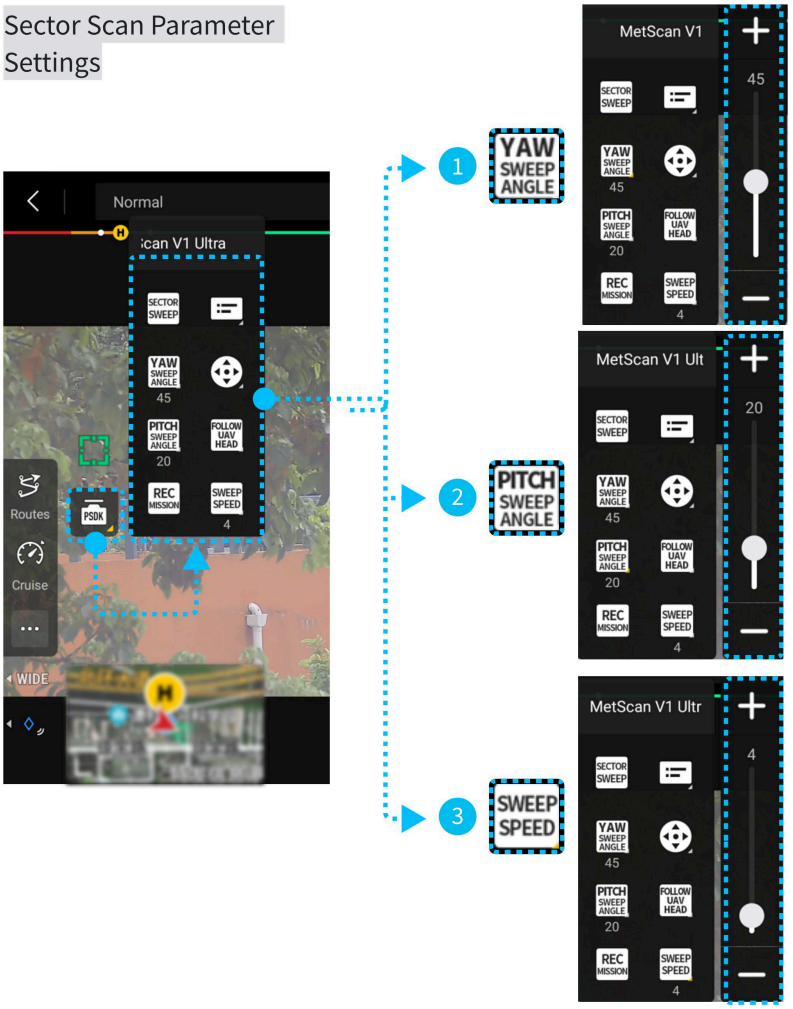

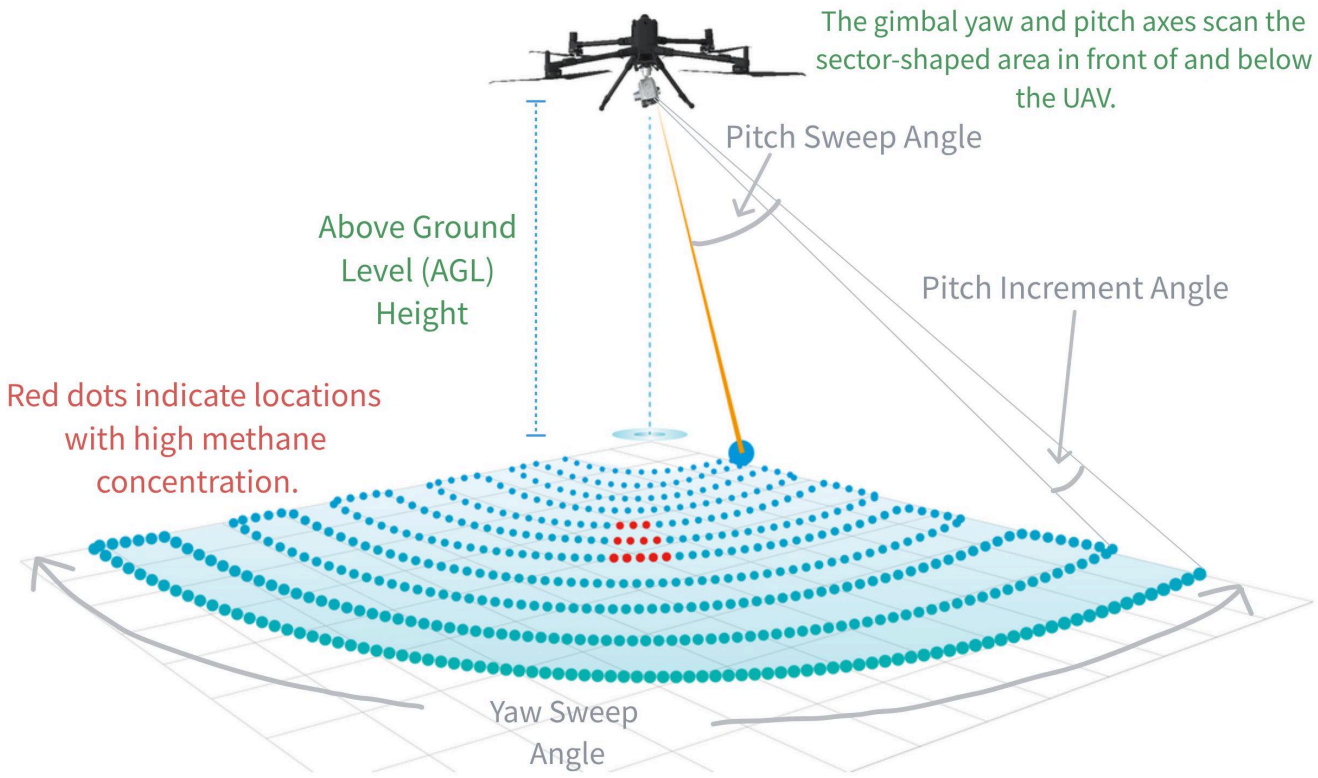

5. After completing the initial parameter settings of the UAV and MetScan, click "Sector Sweep" in the PSDK controls to enable scan mode, then click "Rec Mission" to start recording the Sector Scan mission. At this point, both the "Sector Sweep" and "Rec Mission" icons should be in yellow, and the pop-up window should display "Data Disk: REC". MetScan will first **outline the boundary of the Sector Scan area under the current settings twice**, and then begin the actual scanning. If the outlined coverage area needs adjustment, stop the Sector Sweep, readjust the UAV and MetScan parameters, and then restart the Sector Scan.

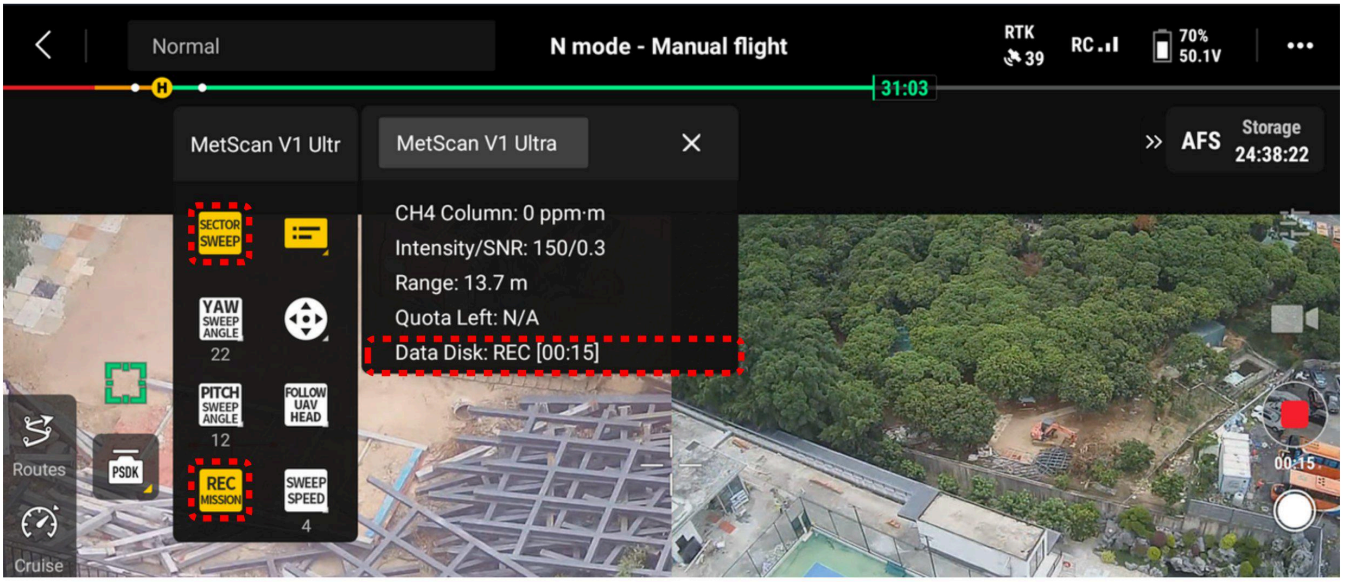

6. Once the UAV and MetScan parameters have been confirmed to deliver satisfactory scan performance, keep a record of the parameters for future use in both manual flights and waypoint missions.

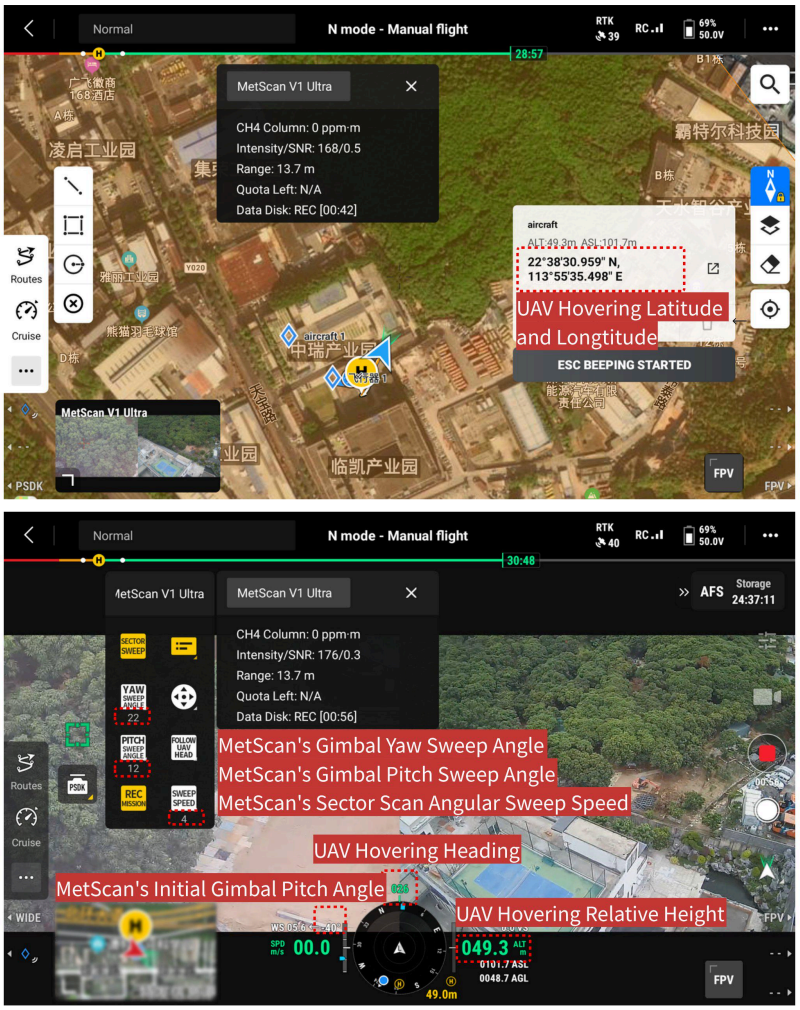

7. During a Sector Scan, the pop-up window displays the estimated remaining time for completing the current Sector Scan cycle. After one Sector Scan cycle is completed, MetScan will not stop scanning but will automatically proceed to the next cycle to densify the scan. If the mission is considered complete, click "Sector Sweep" in the PSDK controls to exit the scan mode, then click "Rec Mission" to stop the mission recording.
8. With a stable 4G connection, the mission can be monitored in real time through the "Real-Time" interface in AIRINS.ai.

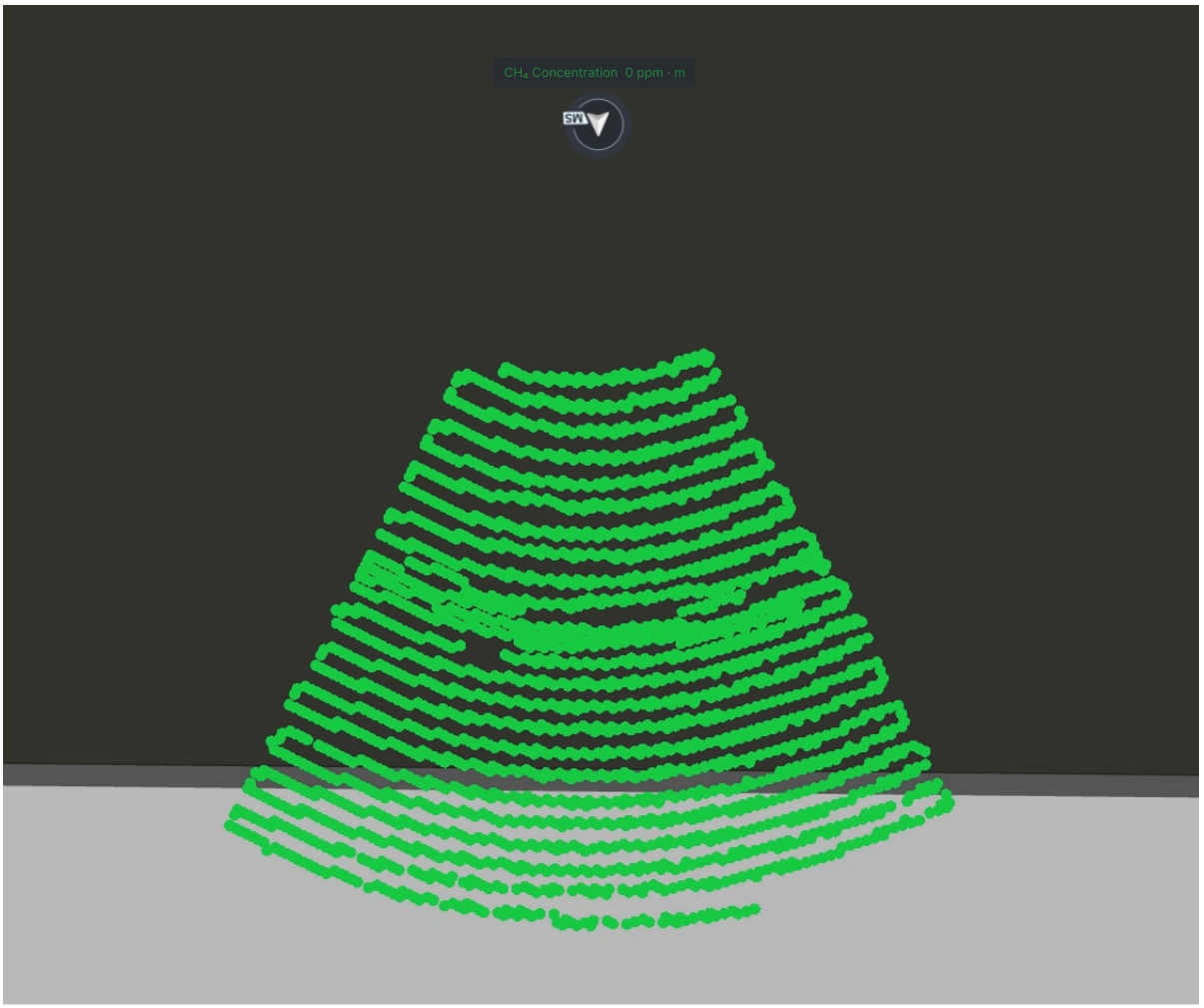

9. After the mission is completed, refer to Section 8 of this document to synchronize the video generated from this Sector Scan mission to AIRINS.ai for further analysis.

7.2 Waypoint Flight (example based on DJI Matrice 400 and DJI Pilot 2 App)

- Before proceeding, ensure that you have reviewed and understood Section 7.1.
- Before planning an automated waypoint mission using DJI Pilot 2 app, **refer to Section 7.1 and first perform a manual Sector Scan mission to verify that the UAV and MetScan parameters achieve the expected results**. Record the UAV and MetScan operating parameters, and then use this section to plan the waypoint mission.
- This section (Section 7.2) requires a thorough understanding of Section 7.3 "Flight Tasks" in the DJI Matrice 400 User Manual. Review and understand the DJI Matrice 400 User Manual before proceeding with this section.

Once a waypoint mission has been verified to operate correctly, it can be reused repeatedly for periodic methane leak scanning at fixed locations.

1. Upon arrival at the work site, strictly follow the installation procedures in Section 4 of this document:
    - Mount the MetScan V1 on the UAV, then power on the UAV and remote controller;
    - In the DJI Pilot 2 app interface, verify that communication between the MetScan V1 and the UAV is functioning normally;
    - Ensure that "Scan Mode" is set to "Sector".

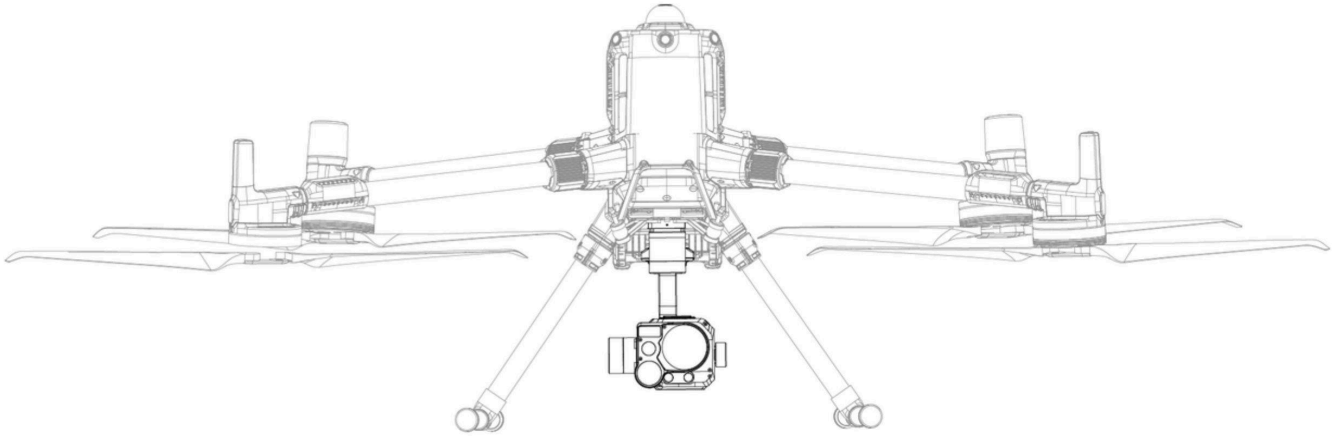

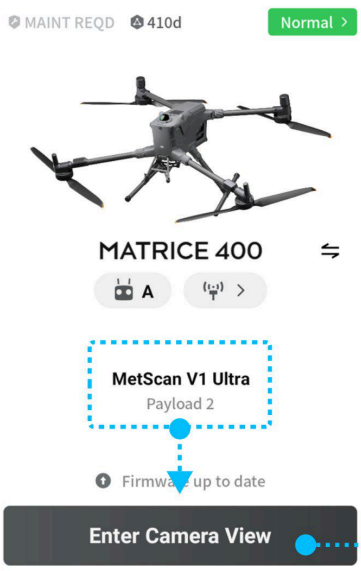



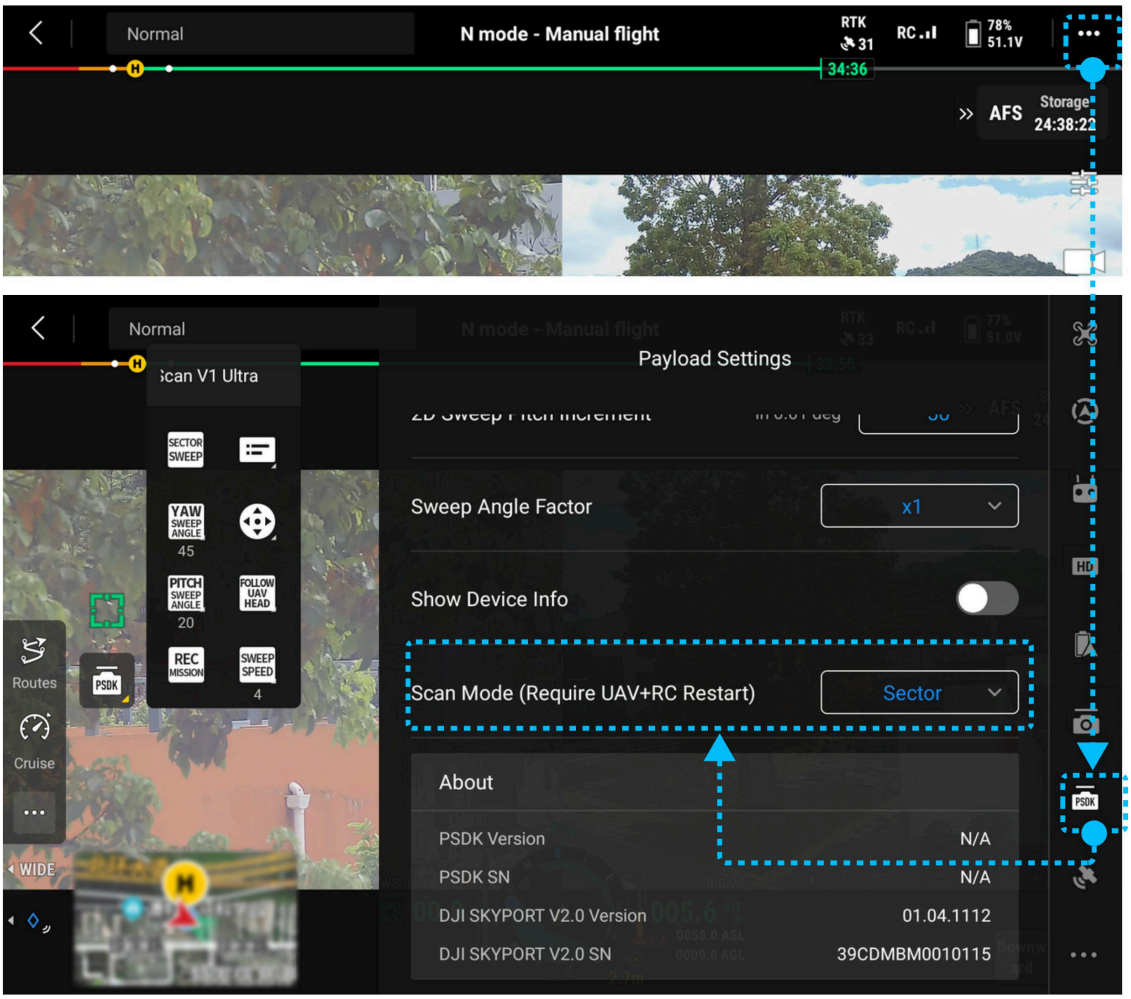

2. In DJI Pilot 2 app, click "Flight Route" to enter the route library, then select "Create a Route" → "Waypoint Route" → "Set Waypoints" to create a new mission and ensure the payload is correctly selected as MetScan V1.

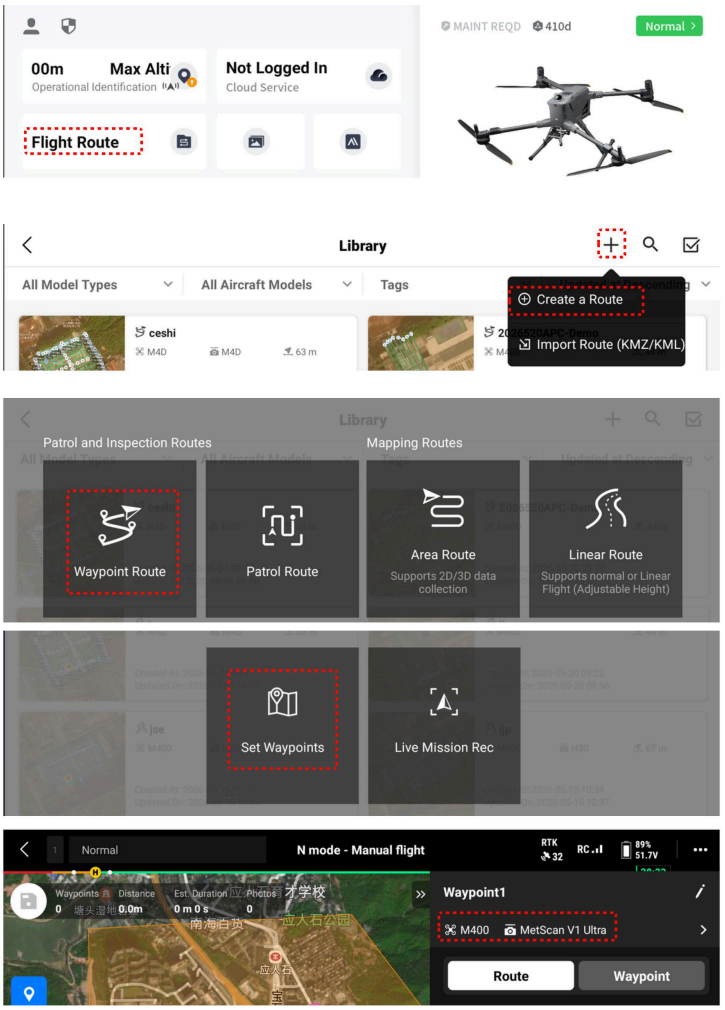

3. Using the "Set Waypoints" function in "Waypoint Route", set the hovering waypoints based on **the UAV parameters (Latitude and Longitude, Relative Altitude, and Aircraft Yaw) recorded during the successfully executed manual Sector Scan mission** in Section 7.1.6.

> During manual flight, the heading displayed on DJI Matrice 400 ranges from 0° to 360°, while the Aircraft Yaw in DJI Pilot 2 app route planning ranges from -180° to 180°. Conversion is required as follows:
>
> - If the UAV Hovering Heading ≤ 180°, the Waypoint Aircraft Yaw = UAV Hovering Heading;
> - If the UAV Hovering Heading > 180°, the Waypoint Aircraft Yaw = UAV Hovering Heading − 360°.

4. Add waypoint actions to this waypoint (based on the MetScan parameters from the successfully executed manual Sector Scan mission, Section 7.1.6), and configure the following in order:
   - "Gimbal Pitch Rotation" (MetScan's Initial Gimbal Pitch Angle);
   - "Yaw/Roll Sweep Angle" (MetScan's Gimbal Yaw Sweep Angle);
   - "Pitch Sweep Angle" (MetScan's Gimbal Pitch Sweep Angle);
   - "Sweep Speed" (MetScan's Sector Scan Angular Sweep Speed);

- "Hover 5 s" (allow time for gimbal to complete the above motion);
- "ON-Sweep Mode"
- "ON-REC Mission"
- Multiple "Hover 30 s" actions (add as needed based on the required duration of the Sector Scan mission; long-duration hovering can be achieved by stacking multiple 30 s hover actions)
- "OFF-Sweep Mode".
- "OFF-REC Mission"

Sector.mp4

> ❗ To perform Sector Scan at multiple locations within a single waypoint mission, add additional hover waypoints using the same procedure. When finished, click the "Save" icon in the upper-left corner to save the mission settings.

5. Execute the waypoint mission, evaluate the results, and optimize the waypoint settings as necessary. With a stable 4G connection, the mission can also be monitored in real time through the "Real-Time" interface in AIRINS.ai.

8. Synchronizing MetScan Mission Raw Data and Video with AIRINS.ai.

- MetScan V1 generates two types of files during a mission:
  - **Mission data file (.airins)**: contains the raw methane-scanning data and associated metadata.
  - **Mission video file (.mp4)**: contains RGB imagery recorded during the methane-scanning mission.
- Both file types can be imported into AIRINS.ai for combined analysis. There are two methods for importing data into AIRINS.ai:
  - Upload the files wirelessly (Wi-Fi) from MetScan V1 to AIRINS.ai..
  - Copy the files to a PC, then upload them to AIRINS.ai.

8.1 Synchronizing with AIRINS.ai via WiFi

1. In the flight interface, open the top-right menu and enter "Payload Settings". Scroll down to find "File Sync Mode", then select "Use WiFi, Cellular Off" from the dropdown list. Next, scroll back to the top and locate "Send Config Command". In the input field, enter the command in the following format:

> "**ssid=wifi name,pwd=wifi password**";

> For example, if the WiFi name is AIRINS-office and the password is 12345678, enter: "ssid=AIRINS-office,pwd=12345678"

Click "Send" and check the PSDK pop-up window to confirm that the WiFi is successfully connected and the signal strength is stable.

> Note: MetScan V1 supports **only the 2.4 GHz Wi-Fi band.**

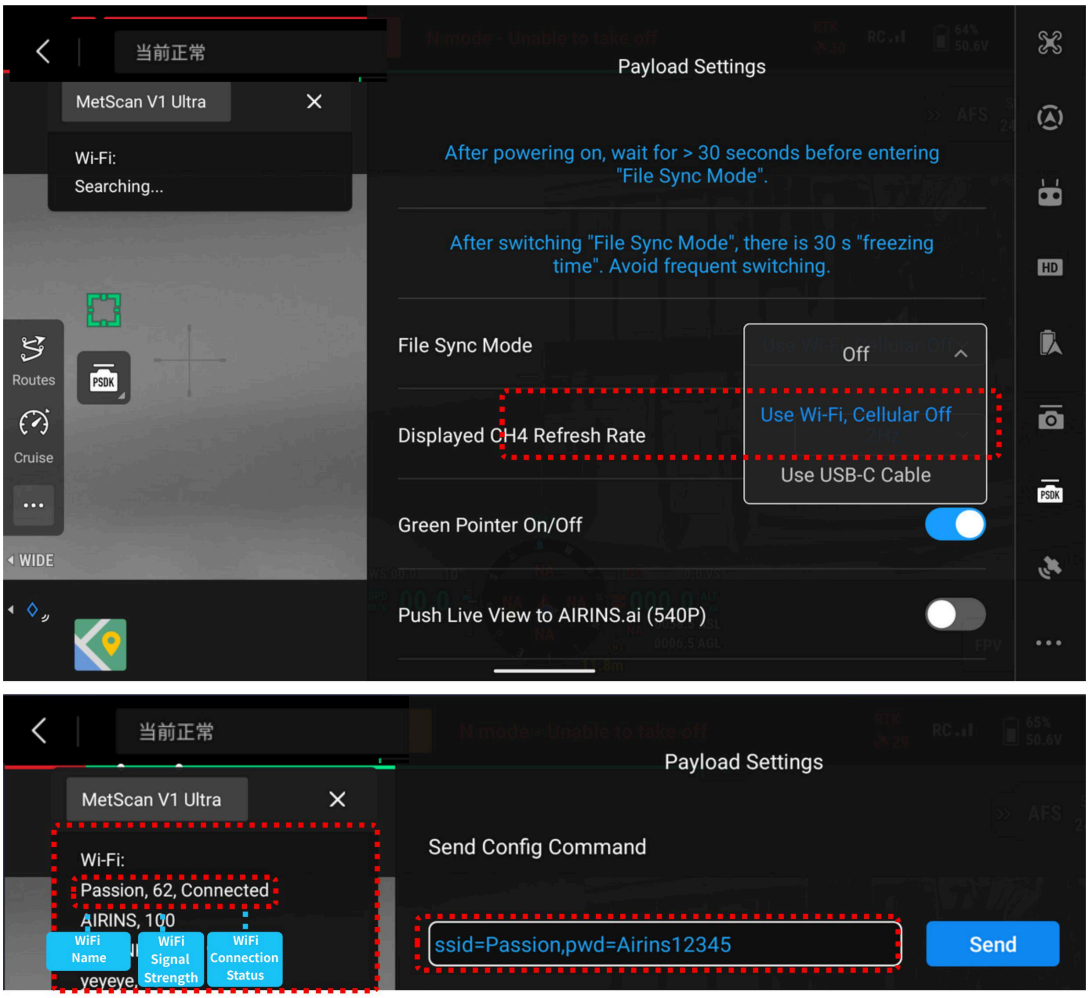

2. Open the AIRINS.ai web interface and log in. In the "Real-Time" section, select the correct MetScan device, then click the "File Sync" button to open the file synchronization panel.

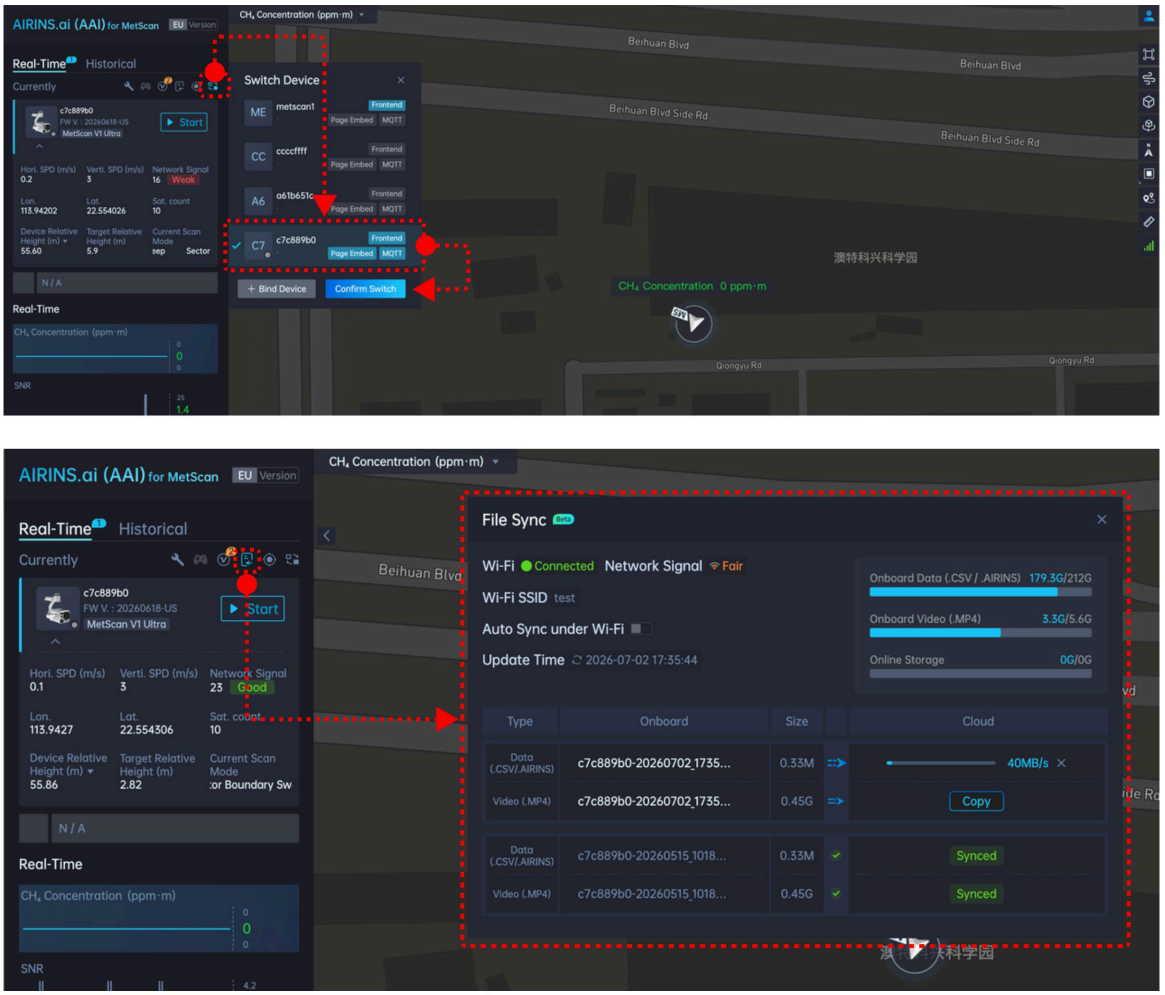

3. When MetScan V1 is connected to the network, AIRINS.ai automatically detects unsynchronized raw data files stored on the device (.csv or .airins) and synchronizes them with AIRINS.ai cloud storage. After synchronization, the raw data files should be displayed as "Synced."
4. AIRINS.ai matches mission video files stored on MetScan V1 with the corresponding mission data in the cloud. For videos that need to be synchronized, click "Copy" to begin the upload. After the upload is complete, AIRINS.ai **may require several minutes** to process the video and align it with the corresponding cloud data.

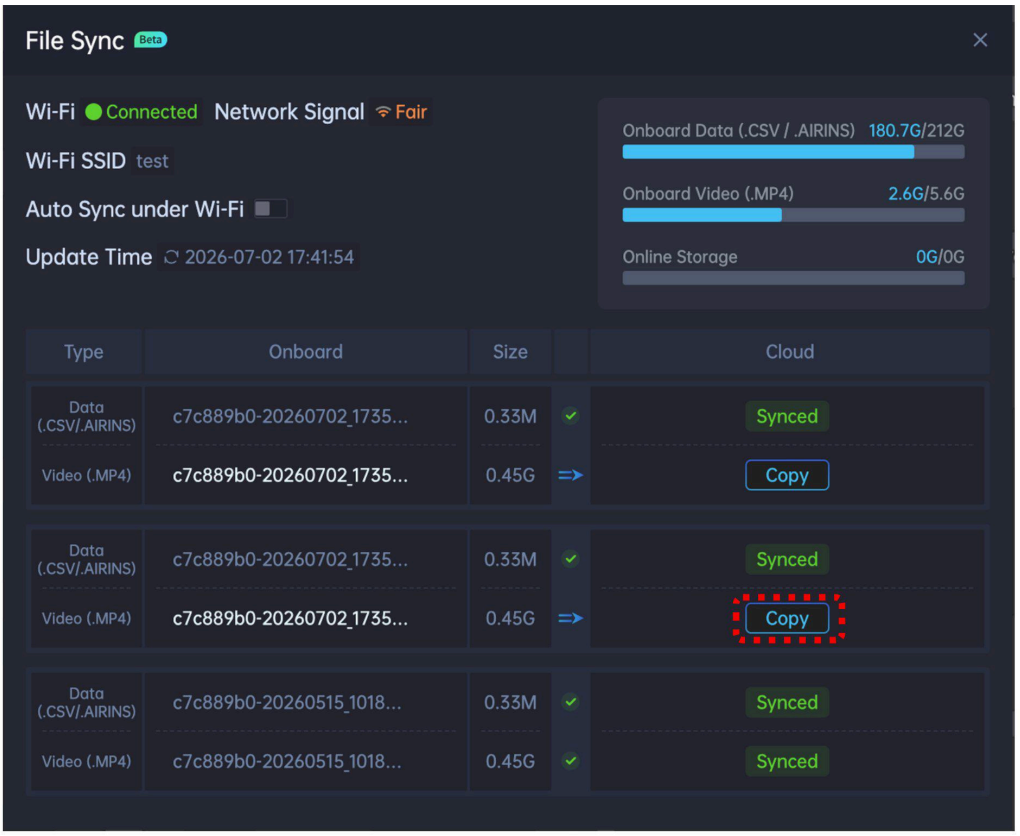

8.2 Copying Files to PC and Uploading to AIRINS.ai

1. In the flight interface, open the top-right menu and enter "Payload Settings". Scroll down to find "File Sync Mode", then select "Use USB-C Cable" from the dropdown list.

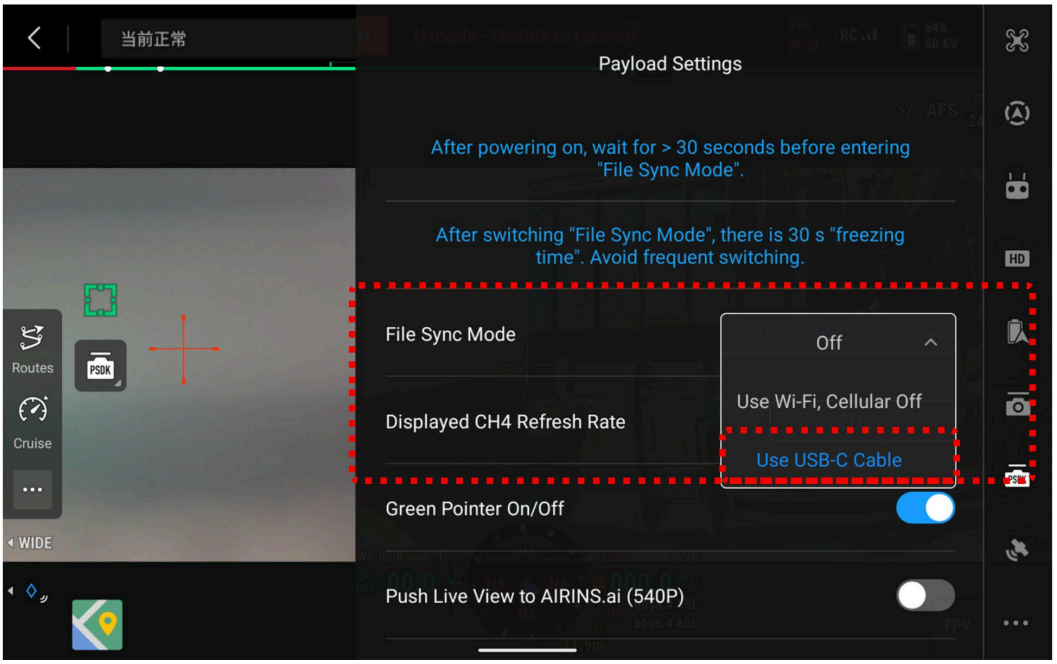

2. Use the "Dual USB-C Cable" supplied in the MetScan V1 carrying case. Connect one end to the USB-C data-transfer port on top of MetScan V1 and the other end to your PC. Once connected, **two folders** will appear automatically on the PC:
   - **MS-DATA**:

- Stores raw mission data (file format: .airins).
- Raw data files follow the naming style: **device serial number–YYYYMMDD–HHMMSS_time zone.airins** (e.g., ca32dff9-20250302-143003_UTC+8.airins).

- **MS-VIDEO**:
  - Stores mission video files (file format: .mp4).
  - Video files follow the naming style: **device serial number–YYYYMMDD–HHMMSS_1.mp4** (e.g., ca32dff9-20250302-143003_UTC+8_1.mp4).

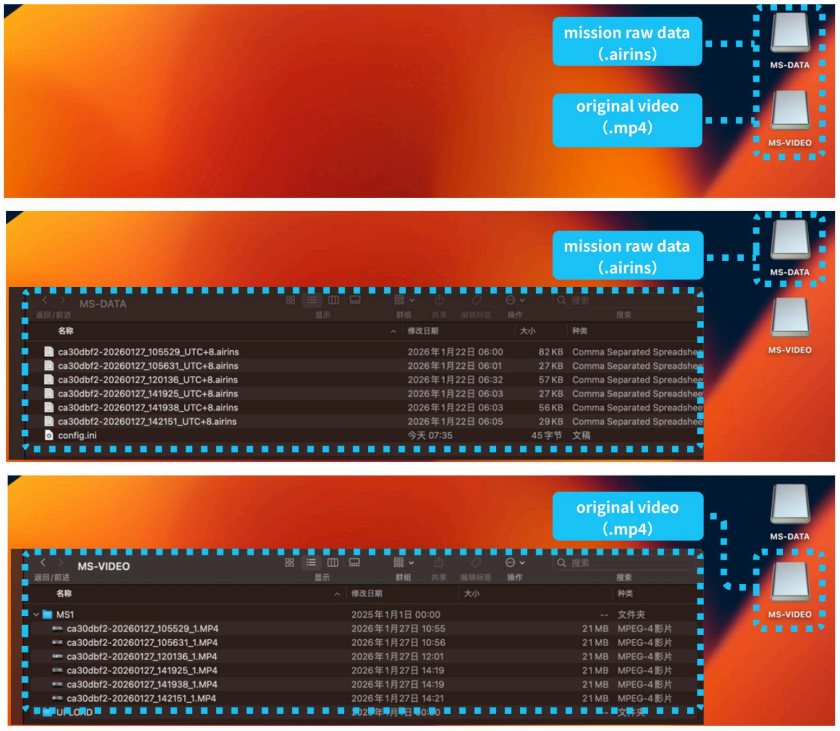

3. Copy the unsynchronized .airins and .mp4 files to the PC.
4. Open the AIRINS.ai web portal and log in. In the "Historical" section, click "Import Mission" in the lower-left corner to open the mission-import panel. Select the mission data file exported from MetScan V1 (.csv or .airins), then click "Import." AIRINS.ai will generate the corresponding mission automatically.

> ❗ If the mission data file has already been synchronized via 4G or Wi-Fi, there is no need to upload the .csv or .airins file again. You may skip Step 4 and proceed directly to Step 5 to upload the mission video.

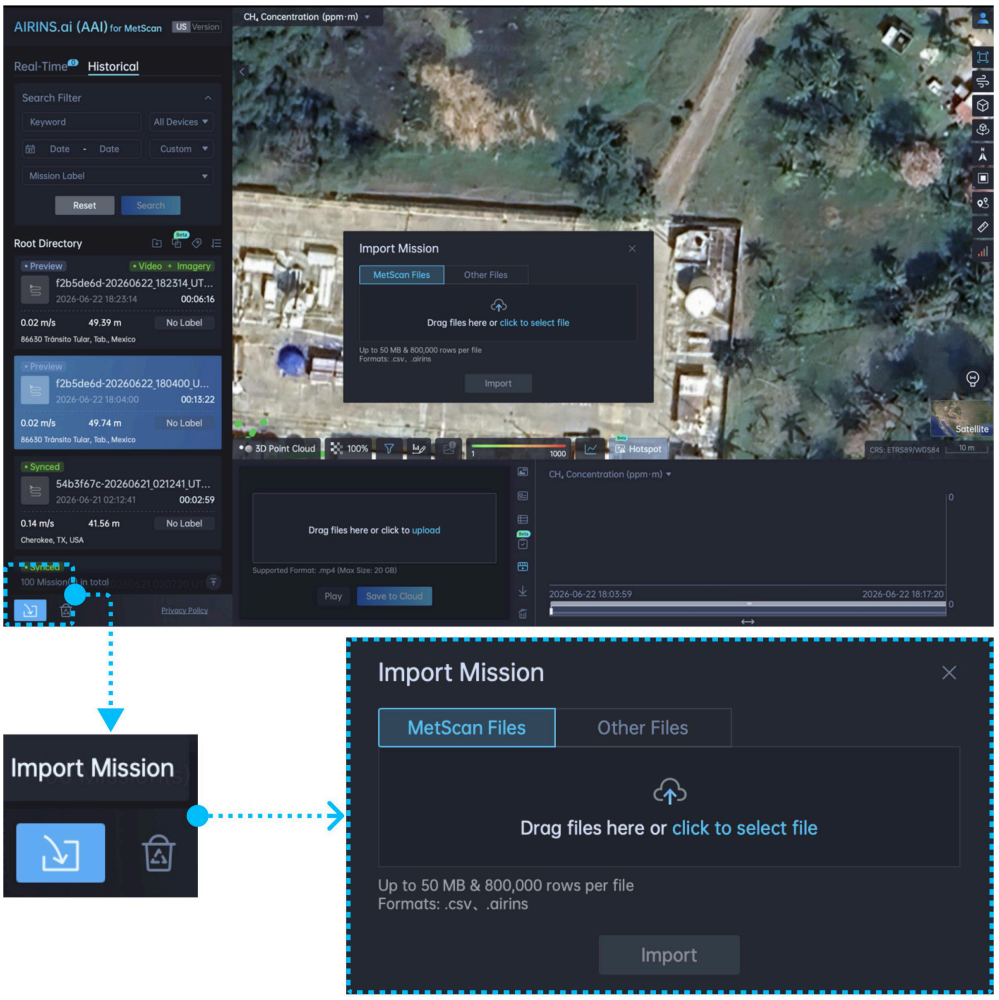

5. In the "Historical" section of AIRINS.ai, open the mission to which the video will be uploaded. Click the "Original Video" icon, then upload the corresponding mission video file (.mp4). After the upload is completed, **AIRINS.ai may require a few additional minutes** to process the video and align it frame-by-frame with the corresponding cloud data.

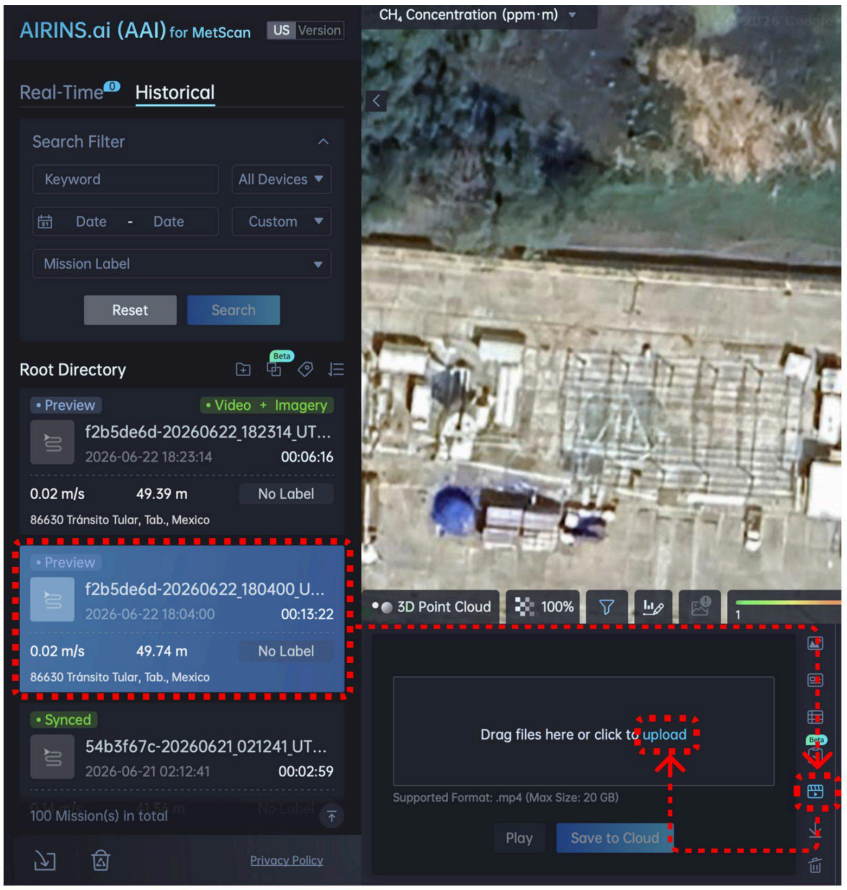

9. Common Operational Errors and Troubleshooting

9.1 Common Operational Errors

- During Belt Scan operations, flying at excessive speed (> 5 m/s) results in sparse data points. A recommended flight speed is 1–3 m/s, and it should be matched with the Belt Scan sweep frequency.
- During Belt Scan operations, a mismatch between the "Planned Flight Height" and the actual height above ground causes significant differences between the planned and actual scan widths. In areas with substantial terrain variation, **use terrain-following** flight.
- During Sector Scan operations, setting the angular sweep speed too high increases both missed detections and false alarms. In most cases, a recommended angular sweep speed is 1–5°/s.
- When using non-DJI flight planning software (e.g., third-party dock systems developed for Matrice 400, or UgCS), MetScan's Initial Gimbal Pitch Angle and sweep parameters may not be configured correctly. This can cause improper alignment with the scan area and invalid data collection.
- During Sector Scan operations, an excessively low incidence angle of the MetScan toward the reflective surface may weaken the returned signal and significantly reduce the effective detection range.
- Before landing the UAV, return the MetScan V1 gimbal to its neutral position, with the camera facing forward horizontally. Otherwise, the payload may strike uneven ground or the lens may become contaminated.

- Incorrect mission-data filter settings in DJI Pilot 2 app or AIRINS.ai (e.g., SNR, Intensity, or Range) may increase false positives or false negatives, or hide valid data.
- Switching scan modes without restarting the UAV and remote controller.
- Rapid switching of "File Sync Mode" may cause the MetScan V1's system to become unresponsive.
- Not placing MetScan in the dedicated carrying case during storage or transportation.

9.2 Common Troubleshooting

- **Abnormal Display of MetScan V1 PSDK Controls in the DJI Pilot 2 App**

  This issue is typically caused by an uncleared DJI Pilot 2 application cache, which can prevent complete loading of MetScan V1 information. **Fully close and restart** the DJI Pilot 2 app on the remote controller.

- **Accessing device information via "Show Device Info"**

  When contacting the AIRINS After-Sales Team, enable "Show Device Info" in "Payload Settings" and provide the displayed information or a screenshot. Include the eight-character MetScan V1 serial number, SIM-card number, and device-maintenance information to help the team provide technical support efficiently.

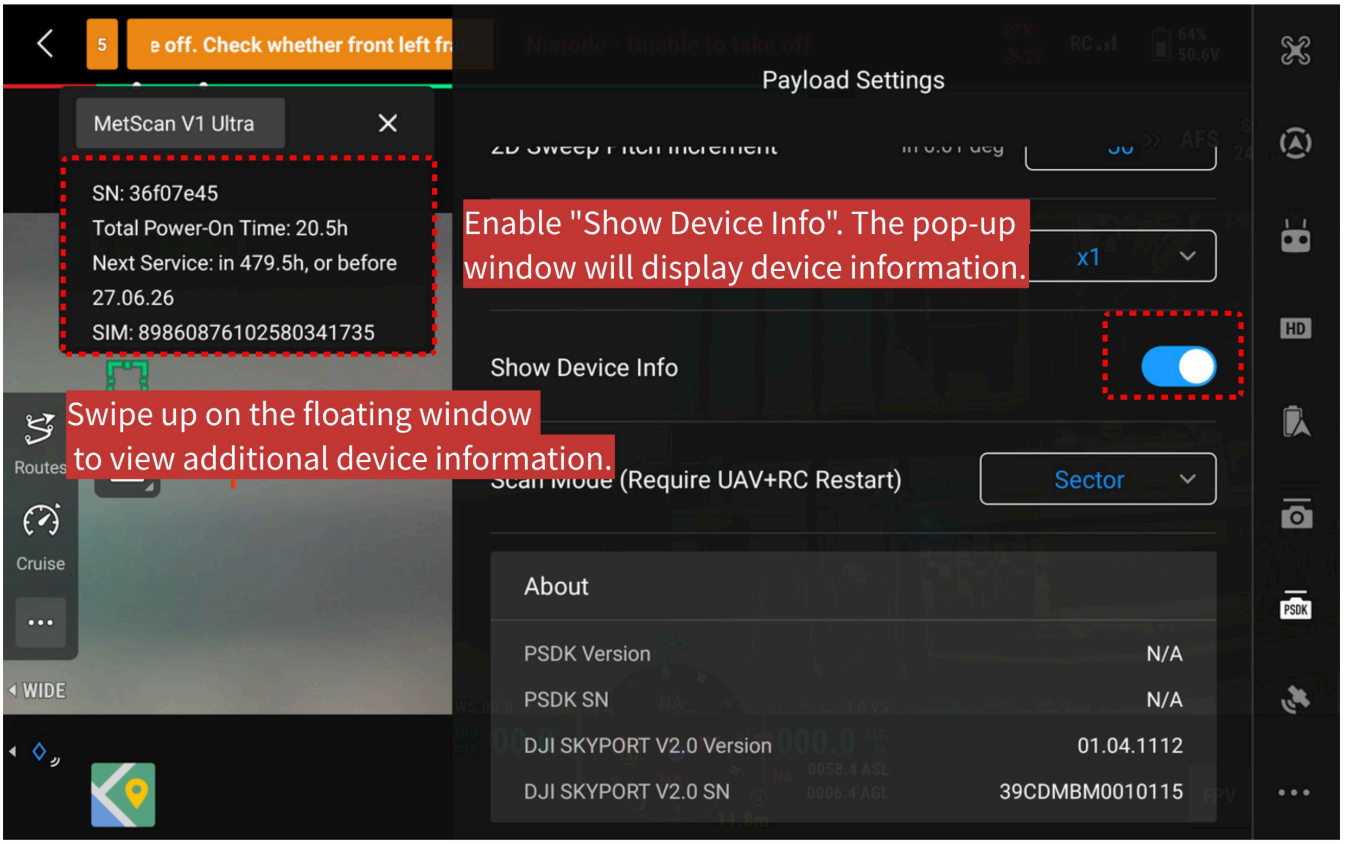

10. Precautions and Product Limitations

10.1 Precautions

- Ensure that all lenses are clean before use. If dust or oil is present on the lens surface, it may lead to:
  - Increased false-positive and false-negative rates.
  - Reduced effective detection range.
- Do not direct the MetScan V1 laser toward a person’s eyes.
- When transporting MetScan V1 by air, carry it in the cabin as hand luggage whenever possible to reduce the risk of condensation caused by rapid temperature changes in the cargo hold.
- Methane can originate from sources unrelated to natural gas, including animal waste, landfills, sewage systems, and biogas digesters. Review the recorded MetScan V1 video in AIRINS.ai to assess whether high-concentration points originate from the natural-gas facility.
- When the MetScan V1 detection laser scans highly reflective surfaces (e.g., water, PV panels, glass, or vehicle paint), variations in reflectivity may increase the false-alarm rate. Avoid scanning such surfaces whenever possible.
- MetScan V1 is IP54 rated and is splash-resistant only; it is not protected against high-pressure water or immersion. Operation in rainy conditions should be avoided.

10.2 Product Limitations

- MetScan V1 uses open-path tunable diode laser absorption spectroscopy (OP-TDLAS) and relies on diffuse reflection to return the laser signal. It therefore cannot reliably detect methane over water or other mirror-like surfaces.
- MetScan V1 is equipped with a telephoto camera with an approximately 300 mm equivalent focal length, a large aperture, and no autofocus. Images captured at close range (<25 m) may therefore be out of focus.