Sniffer4D Nano 2 Plus & AIRINS.ai - Quick Start Guide

Document version: 2026.06.23 10:01

1. Sniffer4D Nano 2 Plus Packing List

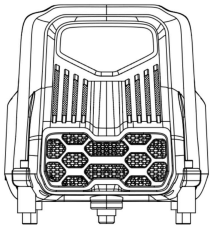

Sniffer4D Nano 2 Plus Multi-Gas System *1

OR

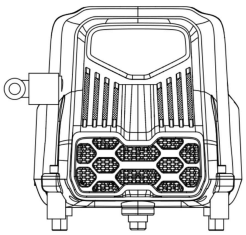

Sniffer4D Nano 2 Plus Methane System *1



M3 × 20 Hex Screw *4



M3 × 25 Hex Screw *4



32 GB Micro SD Card for Mission Data Storage *1



SIM Card with 1-year 2 GB of Global Cellular Data *1
(Sold Separately)



M3 Hex Screw Driver *1

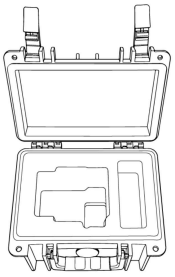

Carrying Case

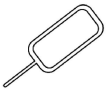

Card Tray Ejection Pin *1



QC Certificate & Warranty Terms

2. Packing Lists of Integration Kits (Sold Separately)

2.1 Matrice 4E / 4T Integration Kit

- **Sniffer4D Nano 2 Plus Multi-Gas System**

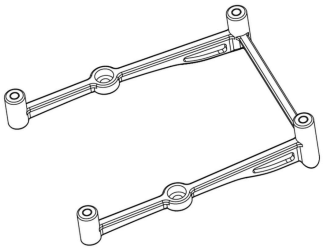

Sniffer4D Nano 2 Plus
Matrice 4E / 4T Mounting Bracket *1



M3 Hex Screw Driver *1



M3×6 Hex Screw *4

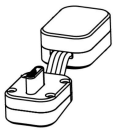

Interface cable *1



M3×22 Hex Screw *8

- **Sniffer4D Nano 2 Plus Methane System**

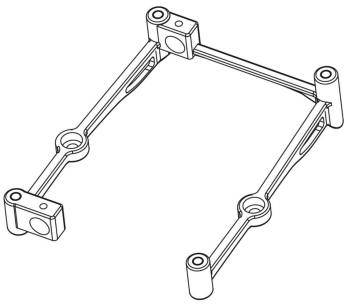

Sniffer4D Nano 2 Plus
Matrice 4E / 4T Mounting Bracket *1



Extended Sampling Tube
(25 cm) * 1



Matrice 4E / 4T Adapter *1



M2.5×3 Hex Screw *4



M3×6 Hex Screw *4



M3×20 Hex Screw *8

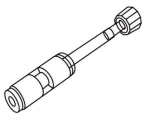

Tube Quick Connector * 1



M2.5 Hex Screw Driver *1



M3 Hex Screw Driver *1

2.2 Matrice 400 Integration Kit

- **Sniffer4D Nano 2 Plus Multi-Gas System**

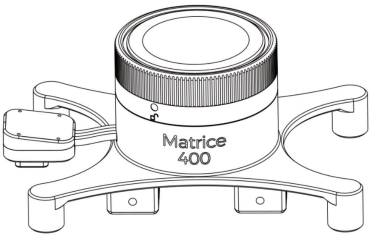

Sniffer4D Nano 2 Plus
Matrice 400 Mounting Bracket *1



M3 Hex Screw Driver *1



M3×20 Hex Screw *8

- **Sniffer4D Nano 2 Plus Methane System**

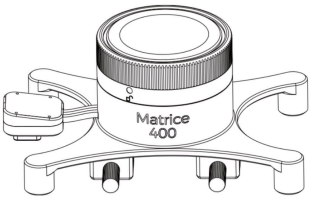

Sniffer4D Nano 2 Plus
Matrice 400 Mounting Bracket *1



Extended Sampling Tube
(50 cm) *1

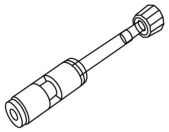

Tube Quick Connector * 1



M3 Hex Screw Driver *1



M2.5 Thumb Screw *4



M3×20 Hex Screw *8

2.3 Vehicle Integration Kit

** Coming soon*

2.4 Go 2 Robot Dog Integration Kit

** Coming soon*

3. Sniffer4D Nano 2 Plus Main Components & Status LEDs

3.1 Main Components

- **Multi-Gas Model**

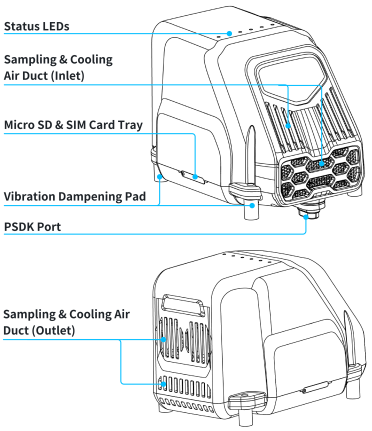

- **Methane-Only Model**

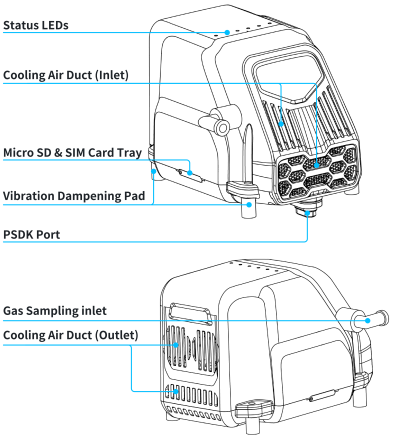

3.2 Status LEDs

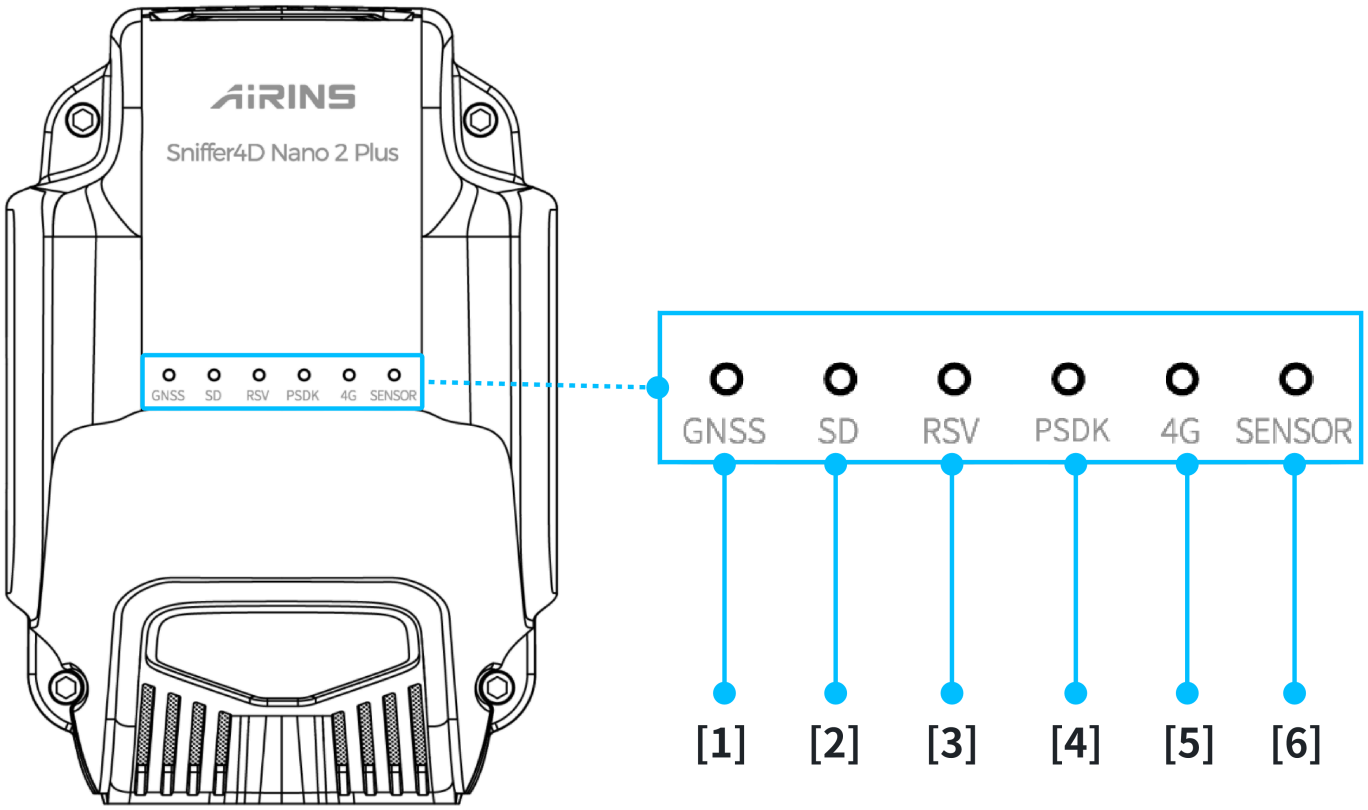

Indicator	Status	Explanation
[1] GNSS	Solid	GNSS positioning available
	Blink	GNSS signal weak, positioning unavailable
	Off	Not connected to a UAV or an external GNSS module
[2] SD	Solid	SD card mounted and mission recording in progress
	Blink	SD card mounted but mission recording has not started
	Off	SD card failed to mount, or no SD card detected
[3] RSV	Solid	The main program is running normally
	Off	The main program failed to start
[4] PSDK	Solid	Connected to a DJI UAV via PSDK
	Blink	Connecting to a DJI UAV via PSDK
	Off	Failed to start the DJI PSDK program in Sniffer4D
[5] 4G	Blink quickly	Communicating with the cloud
	Blink slowly	Not communicating with the cloud, check for (1) whether the SIM card has usable data plan, (2) whether the APN setting is right, and (3) whether there is strong 4G signal in this place
	Off	SIM card not detected / SIM card broken / registering this SIM card in this country for the first time (can last for up to 20 mins)
[6] SENSOR	Solid	The multi-gas / methane sensing chamber is operating normally
	Off	The multi-gas / methane sensing chamber is not operating normally, possibly due to insufficient power supply

4. Integrating Sniffer4D Nano 2 Plus with UAVs

4.1 Integration with DJI Matrice 4D / 4TD inside DJI Dock 3

1. Open the E-Port waterproof rubber cover on the DJI Dock 3's Matrice 4D / 4TD, align the PSDK Port on the bottom of the Sniffer4D Nano 2 Plus with the E-Port on top of the UAV, and insert it vertically, carefully and fully.

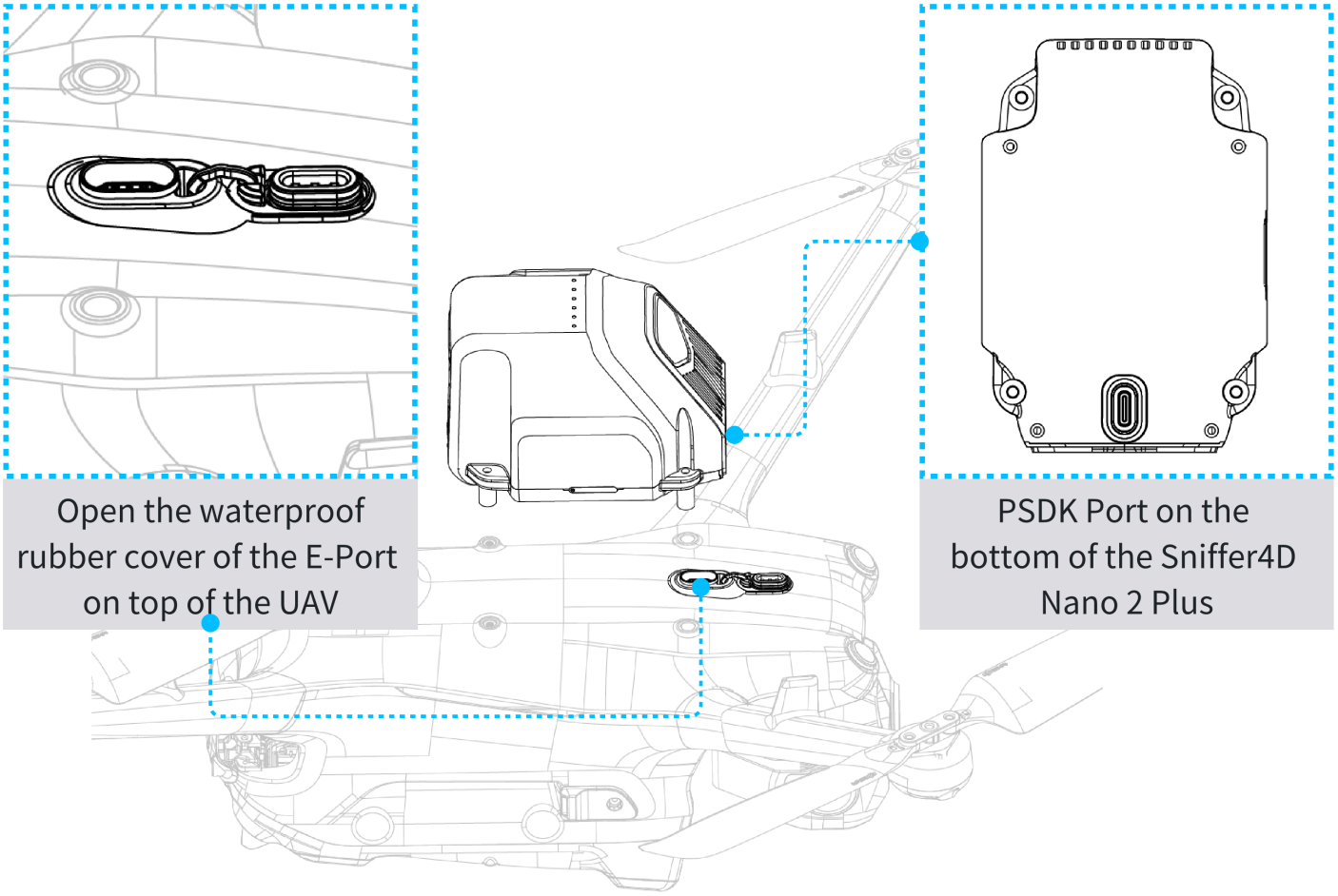

2. Using a hex key, fasten the **front of the** Sniffer4D Nano 2 Plus **with two M3 × 25 mm (longer) screws**, and secure the **rear with two M3 × 20 mm (shorter) screws**.

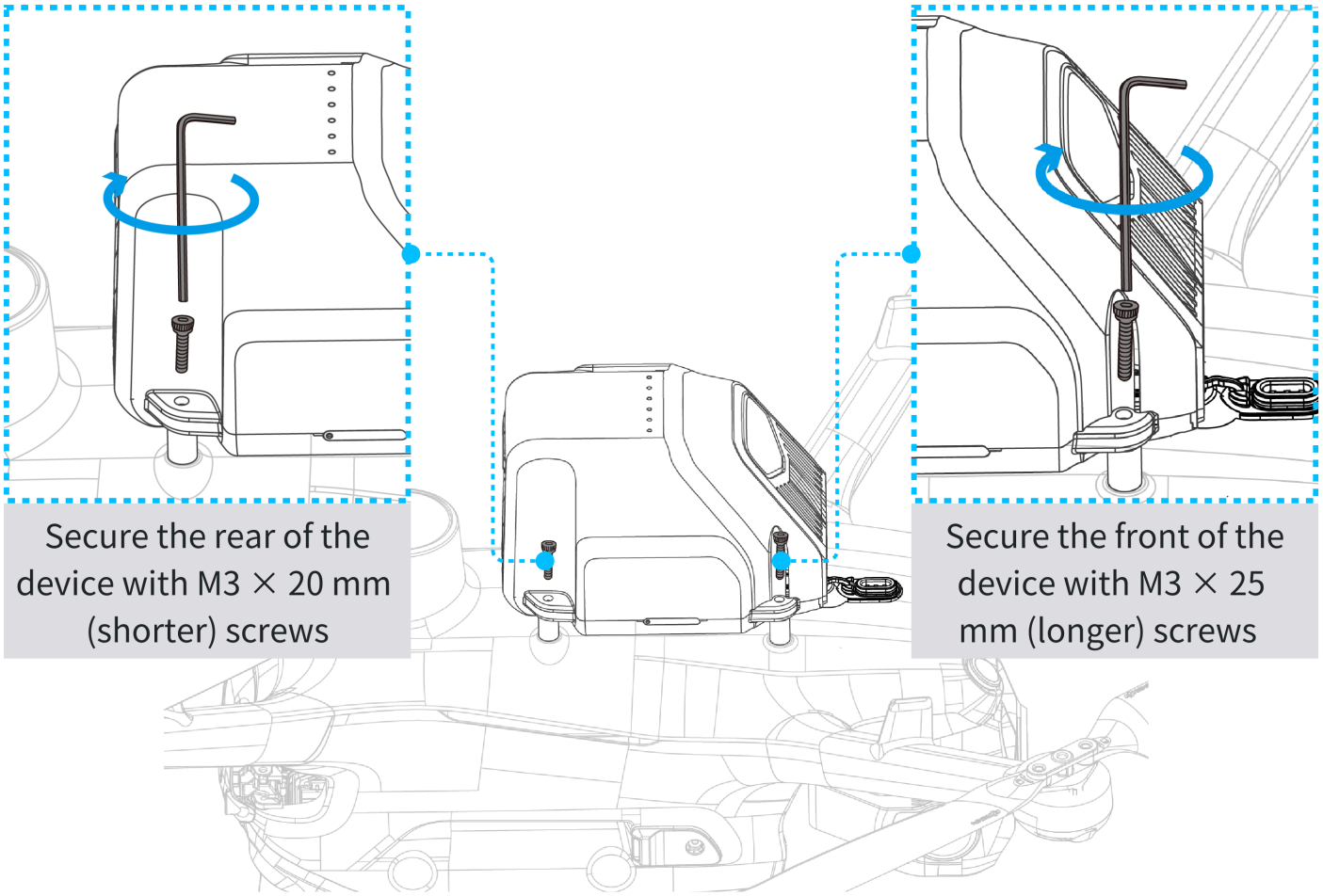

- Always verify screw specifications before installation, and make sure to **distinguish between the longer and shorter screws**.
- Using incorrect screws or failing to tighten them in a cross pattern may cause the Sniffer4D Nano 2 Plus to lose communication with the UAV, or result in unstable communication.

3. Log in to DJI FlightHub 2 and verify that the Sniffer4D Nano 2 Plus is operating normally via **Virtual Cockpit** or **Dock Live View**.

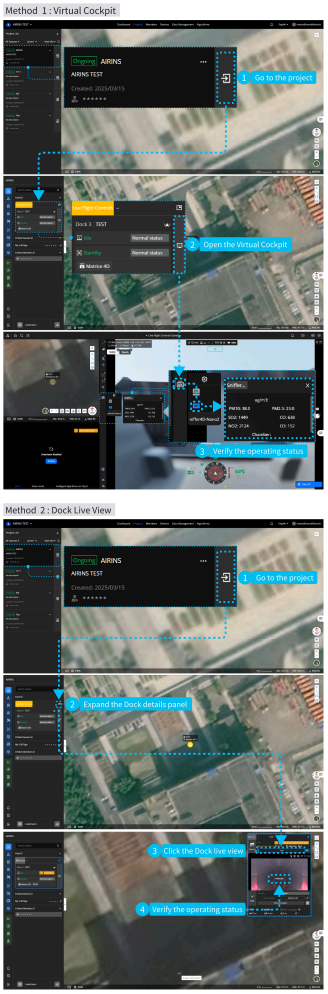

4.2 Integration with DJI Matrice 4E / 4T

4.2.1 Sniffer4D Nano 2 Plus Multi-Gas Version without Extended Sampling Tube

1. Align the two mounting holes at the bottom of the Sniffer4D Nano 2 Plus Matrice 4E / 4T mounting bracket with the screw holes on top of the UAV. Using a hex key, secure the bracket with two M3 × 6 mm hex screws.

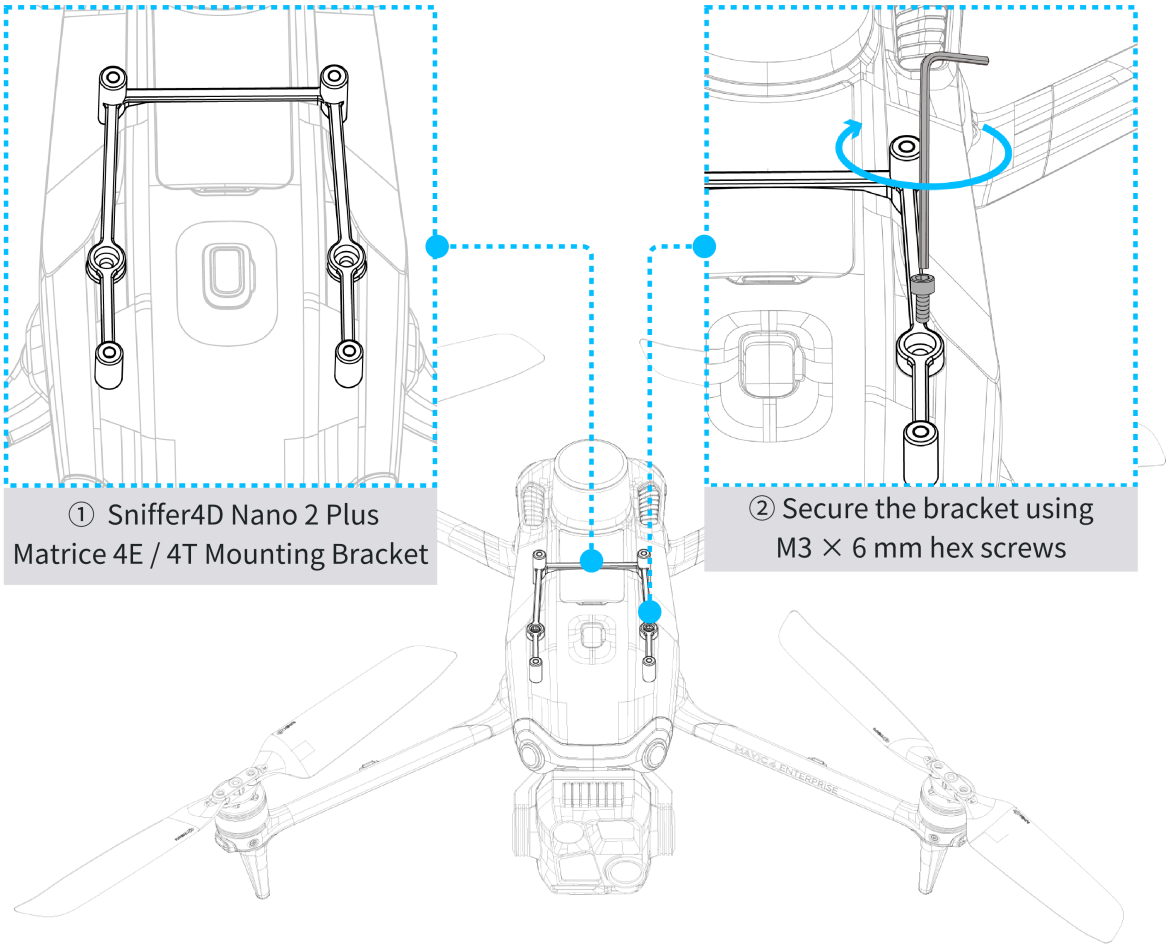

2. Open the UAV E-Port interface, then insert the adapter cable in the direction shown and ensure it is securely connected. Align the Sniffer4D Nano 2 Plus with the connector on the other end of the adapter cable, and press it down vertically and steadily until the device is fully seated and secured in place.

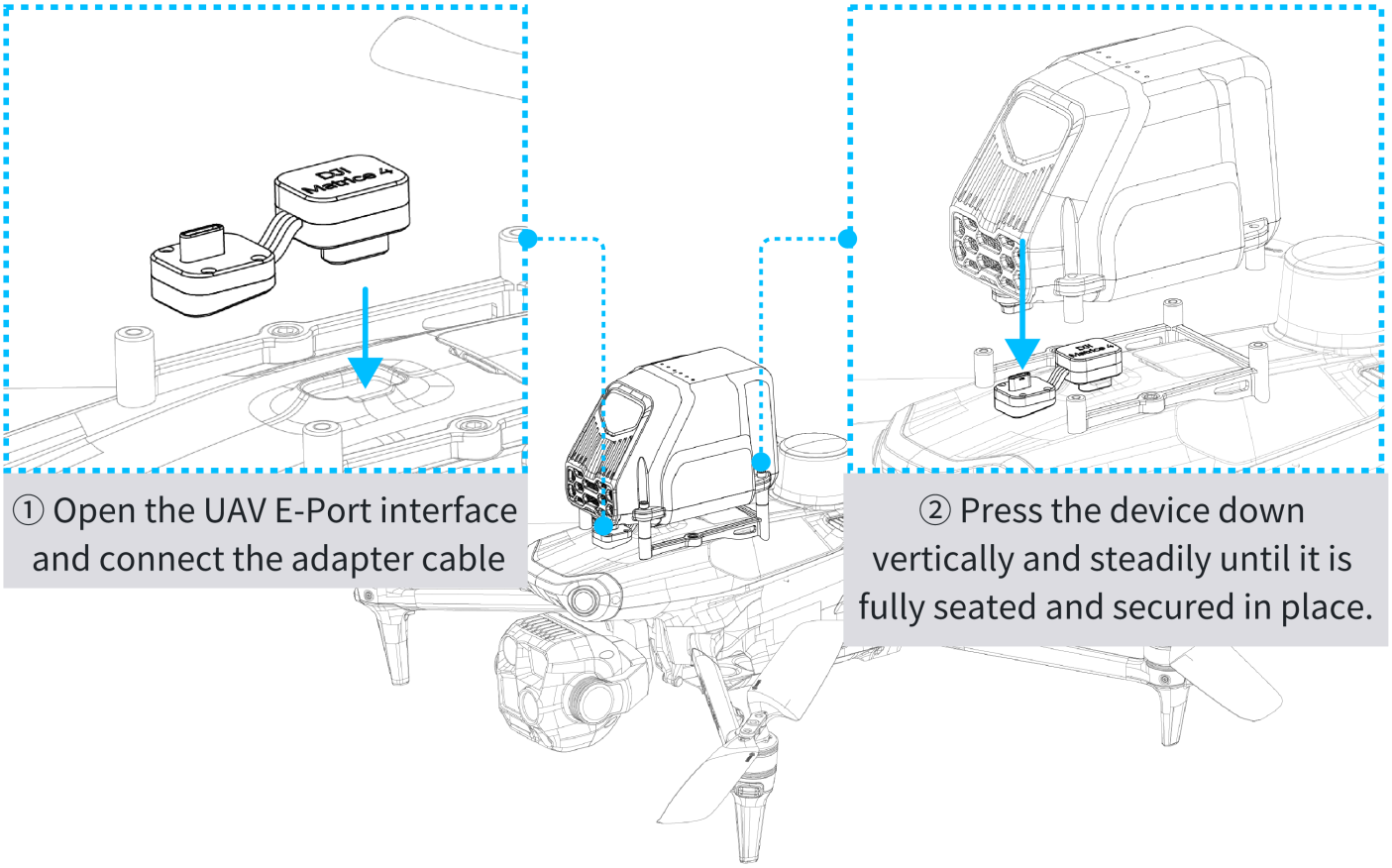

Before connection, make sure the adapter cable is oriented correctly. Forcing insertion in the wrong direction may cause permanent damage to the connector.

3. Use a hex key to tighten four M3 × 22 mm screws to secure the Sniffer4D Nano 2 Plus to the bracket and complete the installation.

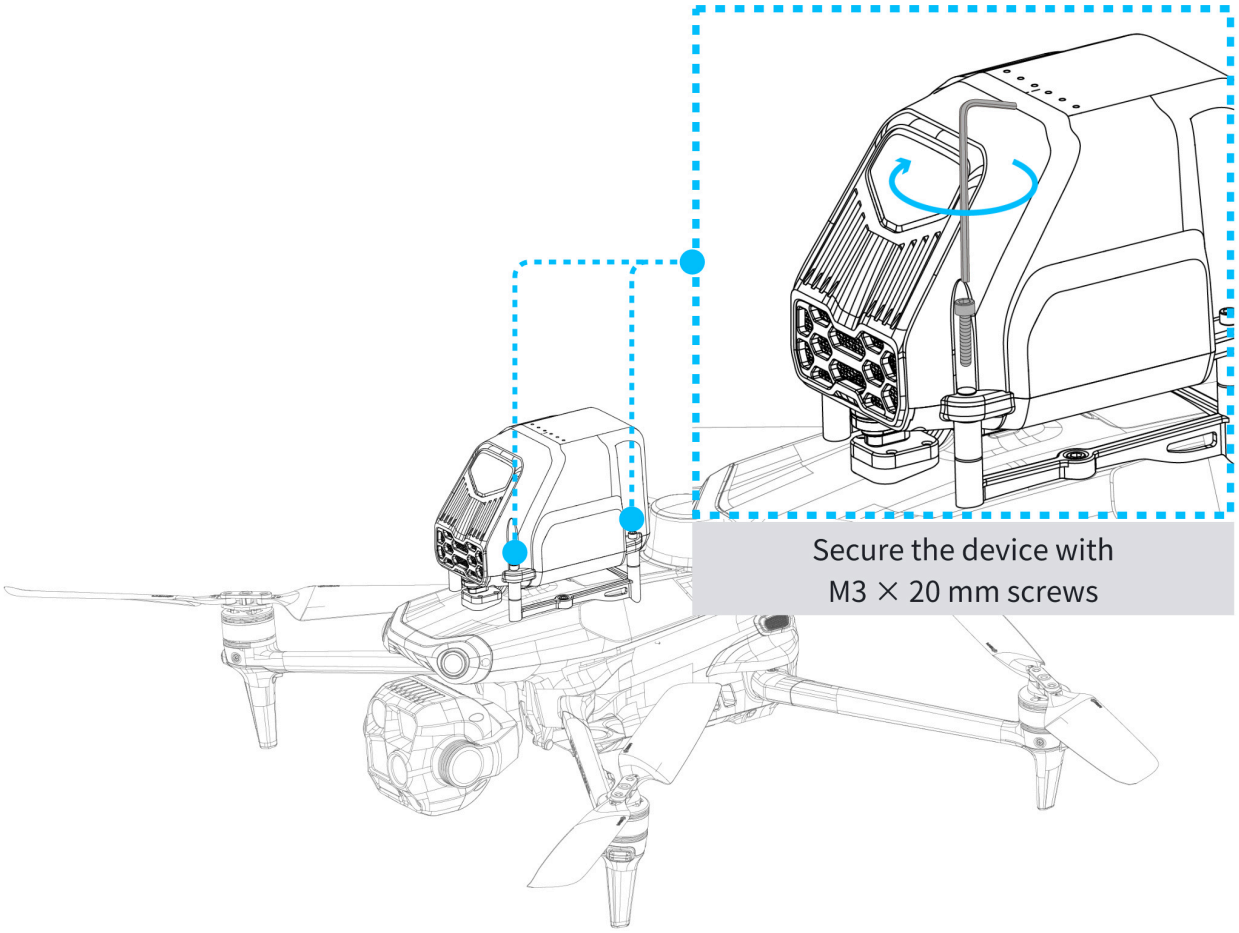

4. Power on the UAV. Use DJI Pilot 2 to view the real-time data of the Sniffer4D Nano 2 Plus and confirm that the device is operating normally.

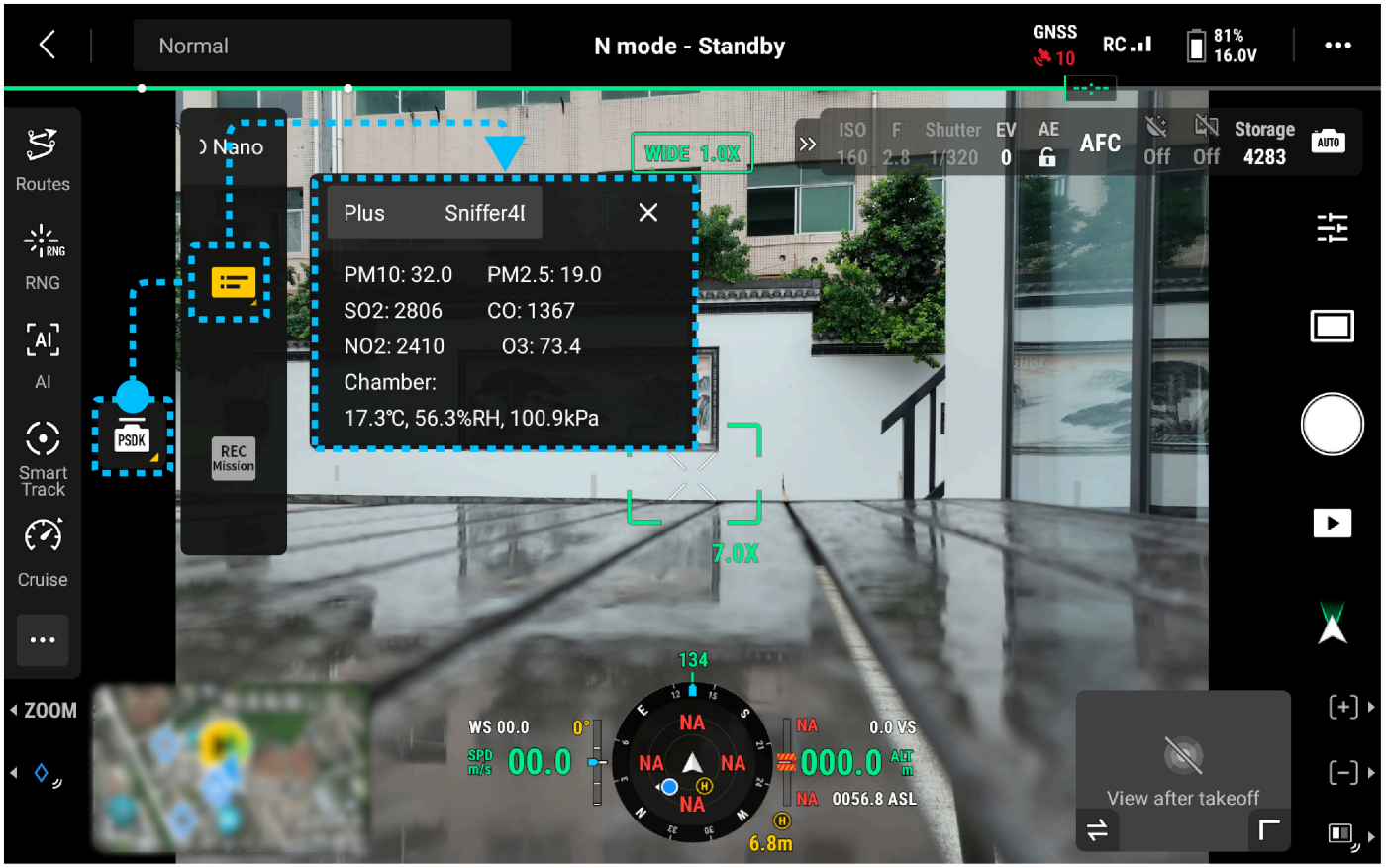

4.2.2 Sniffer4D Nano 2 Plus Methane-Only Version with Extended Sampling Tube

1. Connect the extended sampling tube to the corresponding interface on the Sniffer4D Nano 2 Plus Matrice 4E / 4T bracket. Tighten two M2.5 screws to ensure the sampling tube is securely fixed with no looseness.

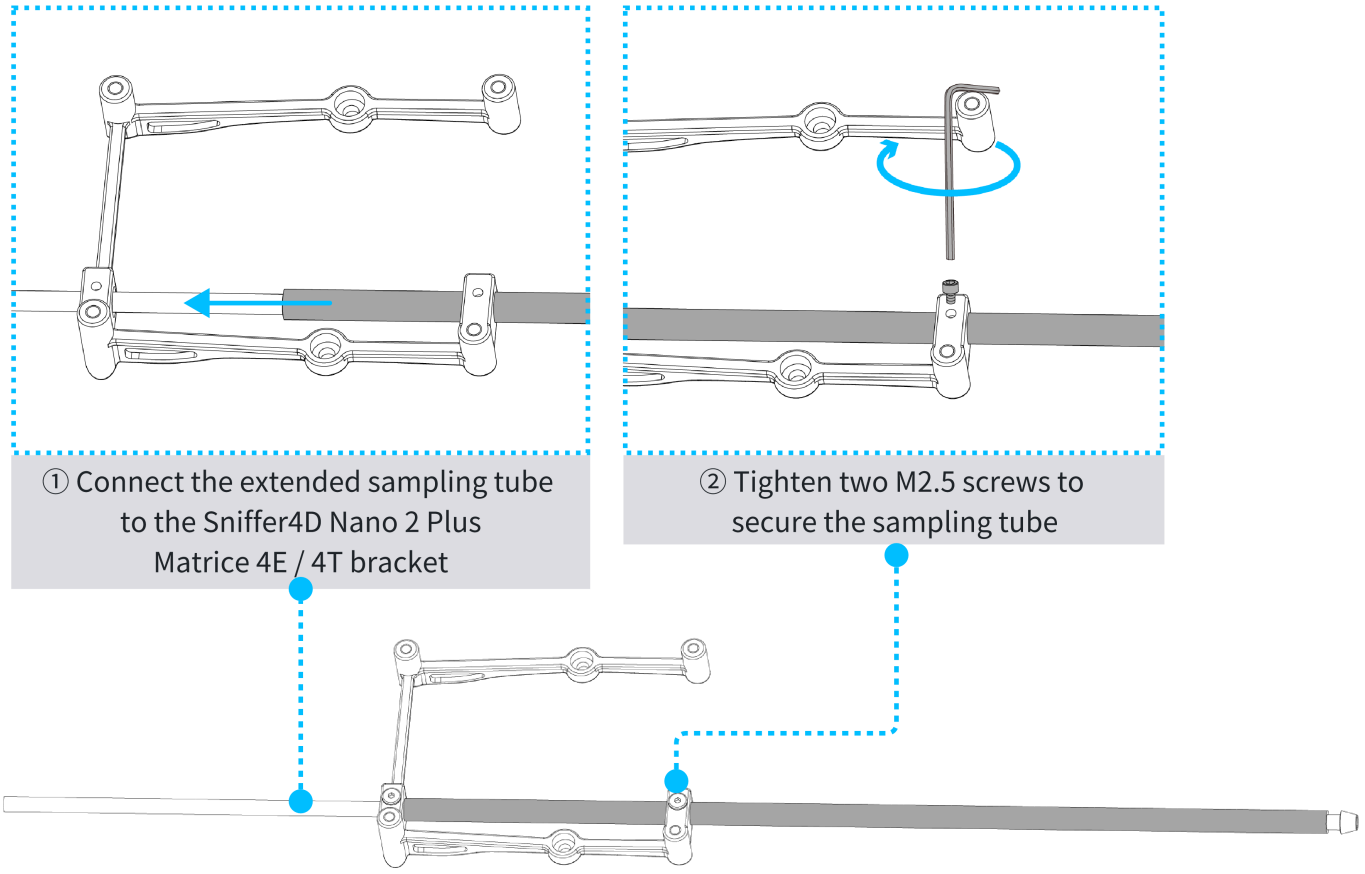

2. Align the two screw holes at the bottom of the Sniffer4D Nano 2 Plus Matrice 4E / 4T bracket with the screw holes on the top of the UAV body. Use a hex key to tighten two M3 × 6 mm hex screws to secure the bracket.

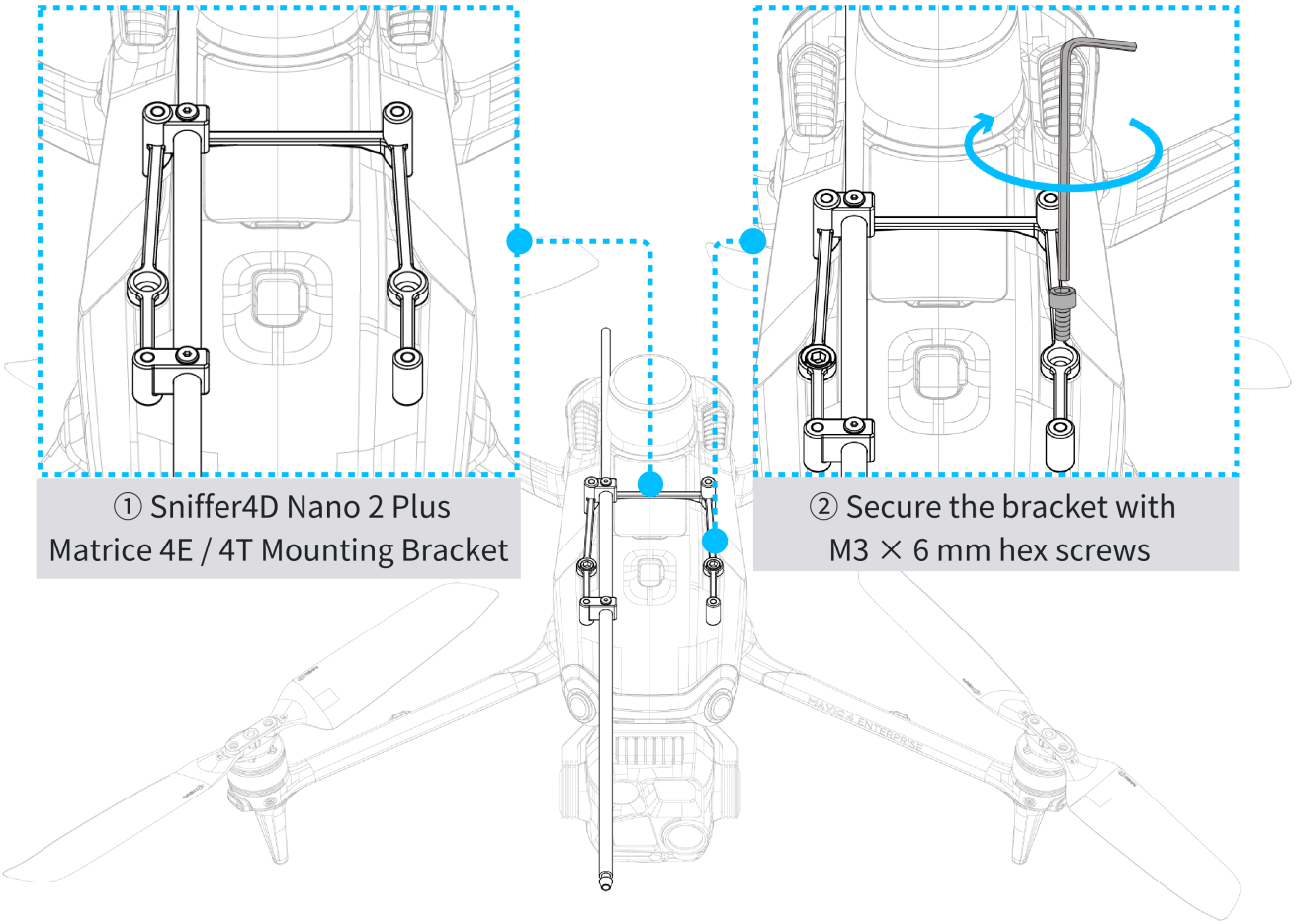

3. Open the UAV E-Port interface, insert the adapter cable in the direction shown, and ensure it is properly connected. Then align the PSDK port on the bottom of the Sniffer4D Nano 2 Plus with the connector at the other end of the adapter cable, and press it down vertically and steadily until the device is fully seated and secured in place.

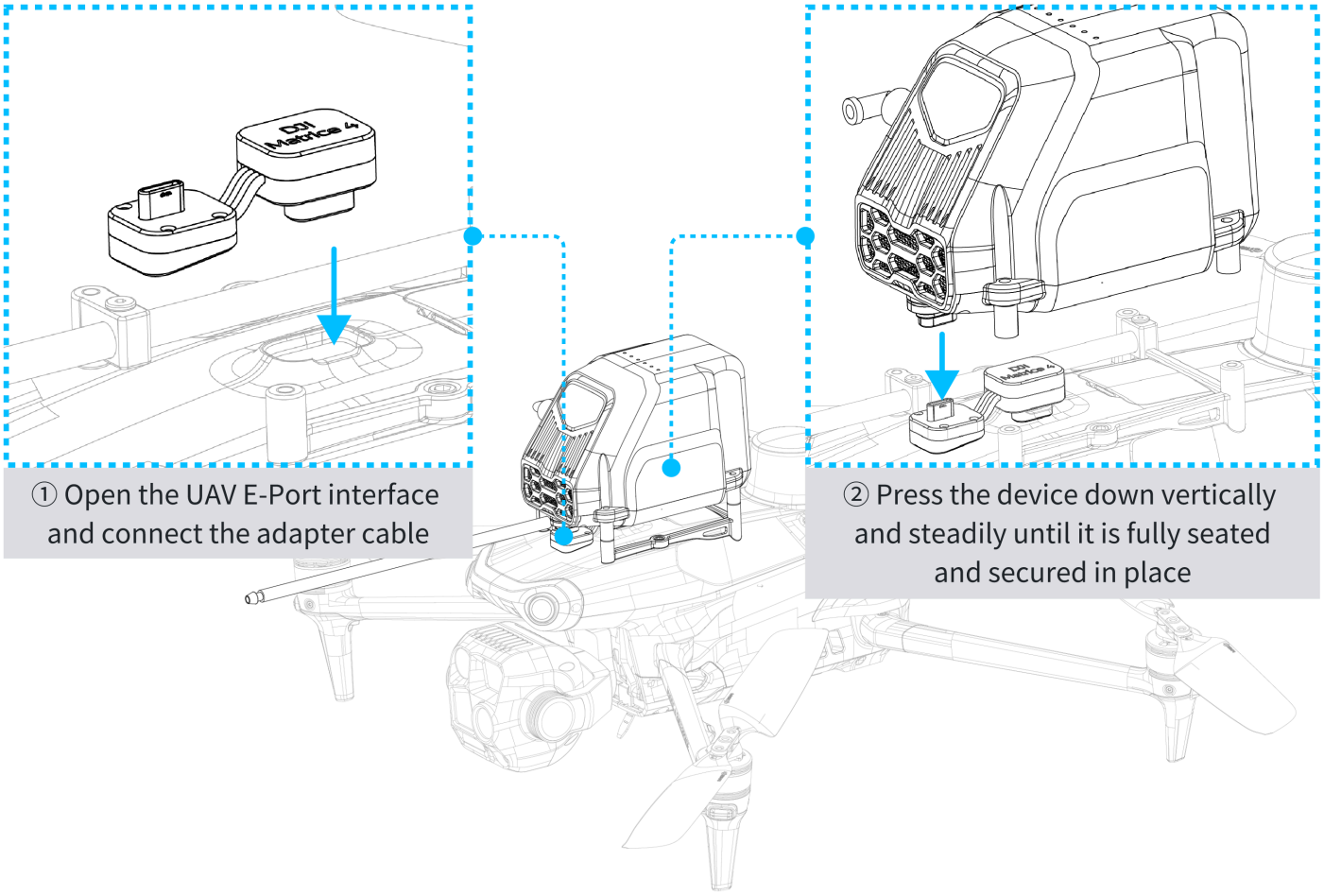

Before connection, make sure the adapter cable is oriented correctly. Forcing insertion in the wrong direction may cause permanent damage to the connector.

4. Use a hex key to tighten four M3 × 22 mm screws to secure the Sniffer4D Nano 2 Plus to the bracket.

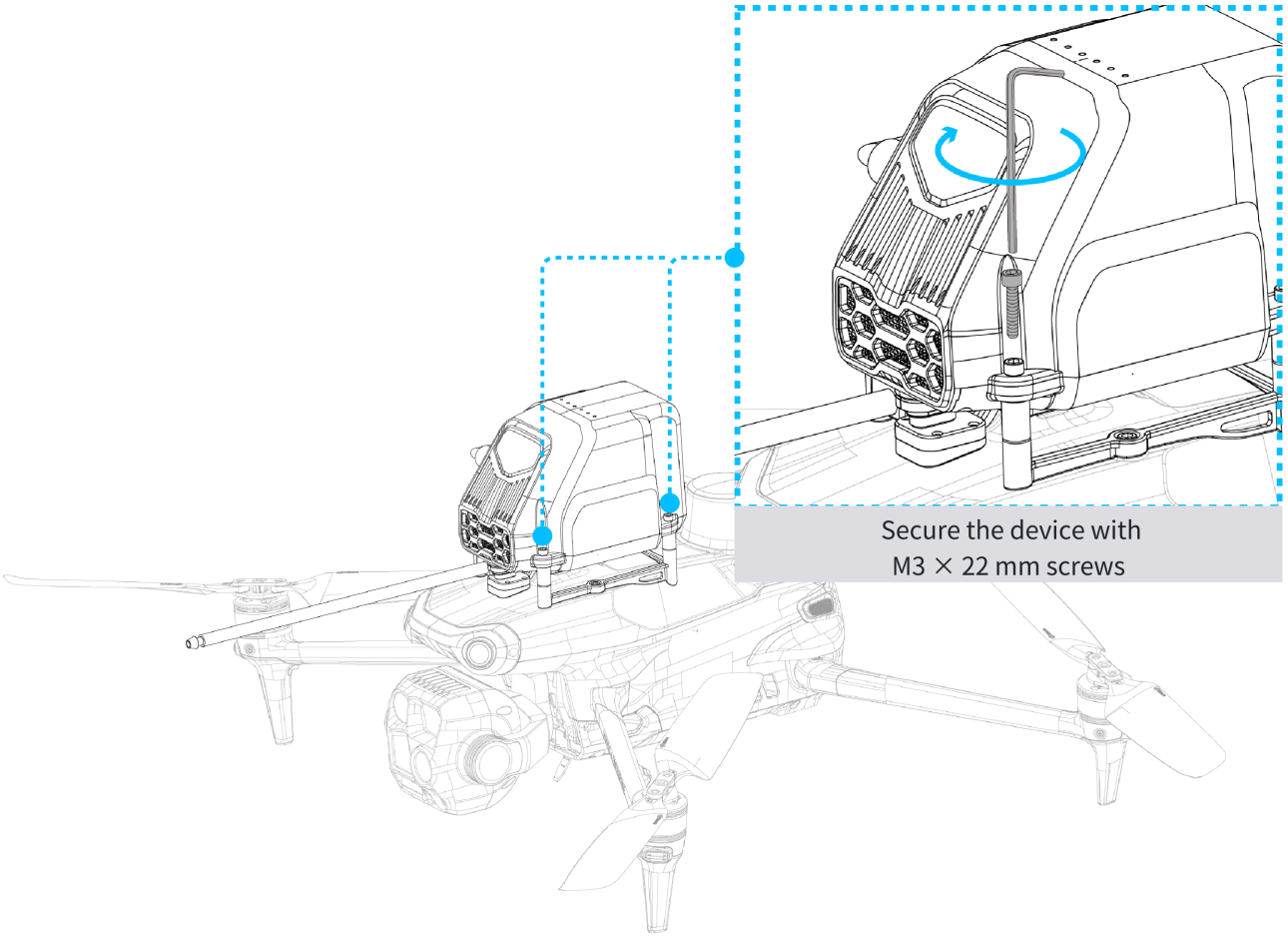

5. Insert the extended sampling tube into the quick connector until it is locked in place with no looseness. Then screw the gas tube quick connector clockwise into the air inlet of the main unit and tighten it to ensure proper sealing. This completes the installation.

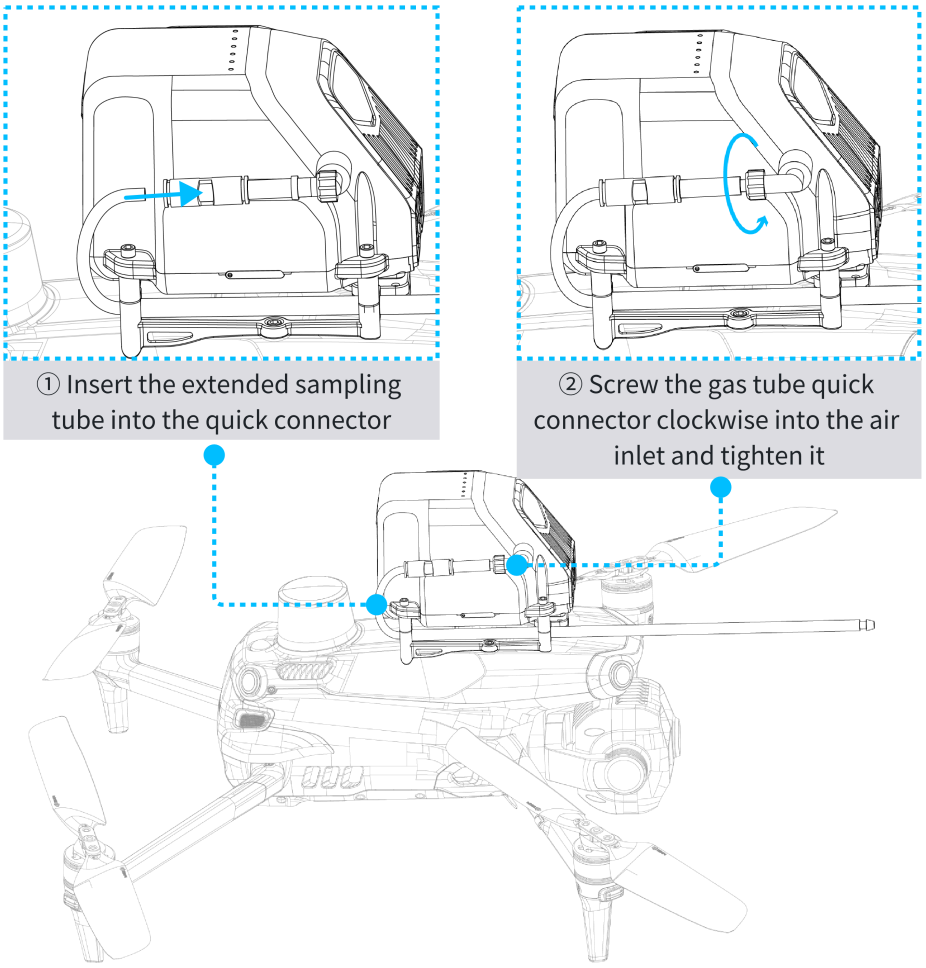

After completing the installation, power on the UAV. Once the device is operating normally, block the air inlet of the extended sampling tube by hand. At this point, the operating noise of the internal pump should increase noticeably, indicating that the tubing is properly sealed. If no noticeable change in noise is heard, there may be a leakage point in the gas path. Please check the airtightness of the gas path.

6. Power on the UAV. Use DJI Pilot 2 to view the real-time data of the Sniffer4D Nano 2 Plus and confirm that the device is operating normally.

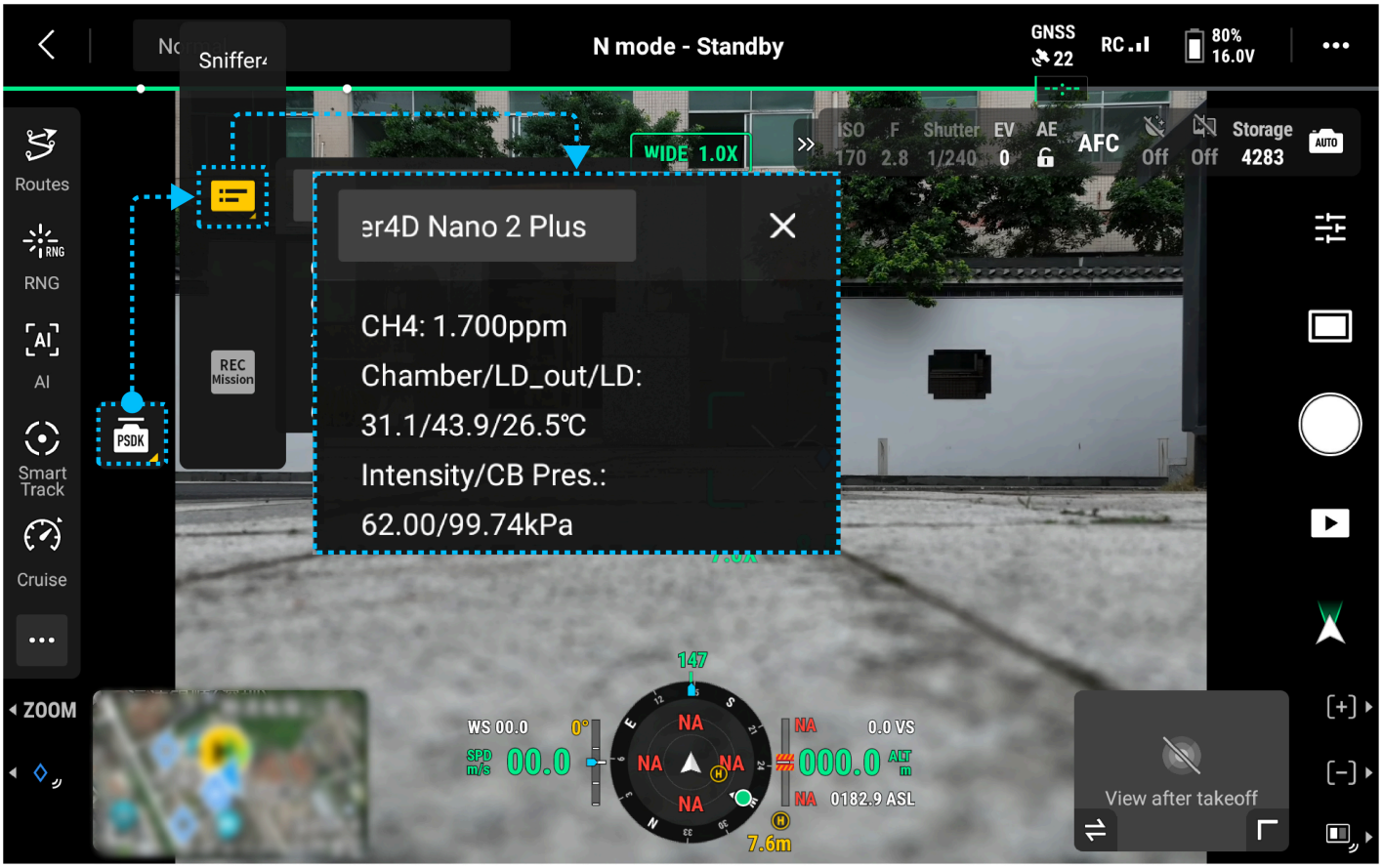

4.3 Integration with DJI Matrice 400

4.3.1 Sniffer4D Nano 2 Plus Multi-Gas Version without Extended Sampling Tube

> ❗ If you selected the DJI Matrice 400 mounting kit when purchasing the Sniffer4D Nano 2 Plus, the mounting kit will be pre-installed on the Sniffer4D Nano 2 Plus before shipment. In this case, you do not need to perform Steps 1 and 2 below.

1. Align the four screw holes at the bottom of the Sniffer4D Nano 2 Plus Matrice 400 bracket with the screw holes on the main unit. Press down vertically until it is properly seated, then insert the adapter cable connector into the corresponding interface on the bracket and ensure it is securely connected.

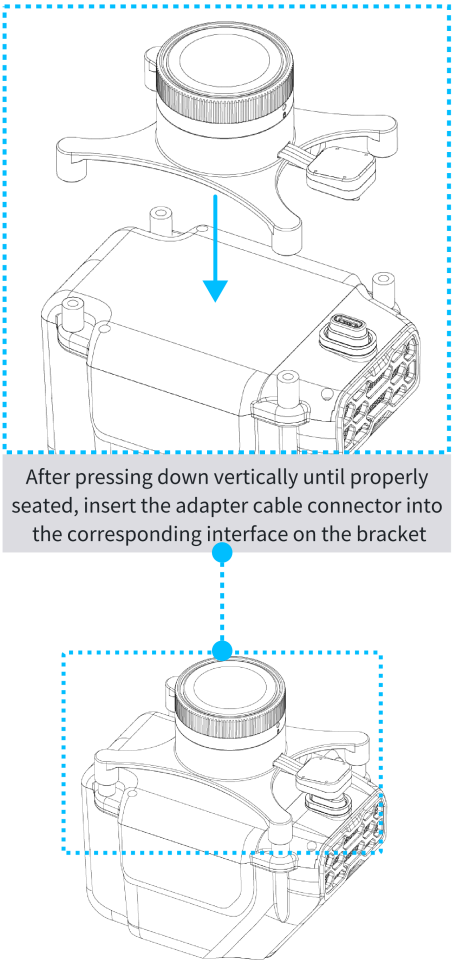

2. Use a hex key to tighten four M3 × 20 mm screws to secure the Sniffer4D Nano 2 Plus to the bracket.

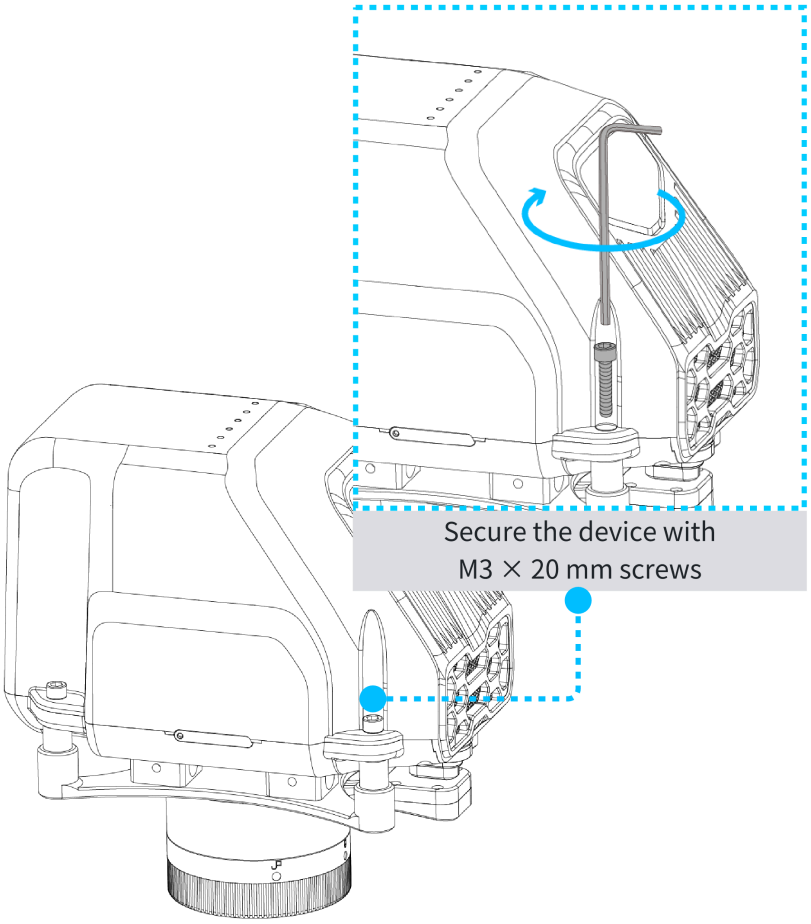

3. Remove the protective cover from the adapter ring of the Sniffer4D Nano 2 Plus Matrice 400 bracket.

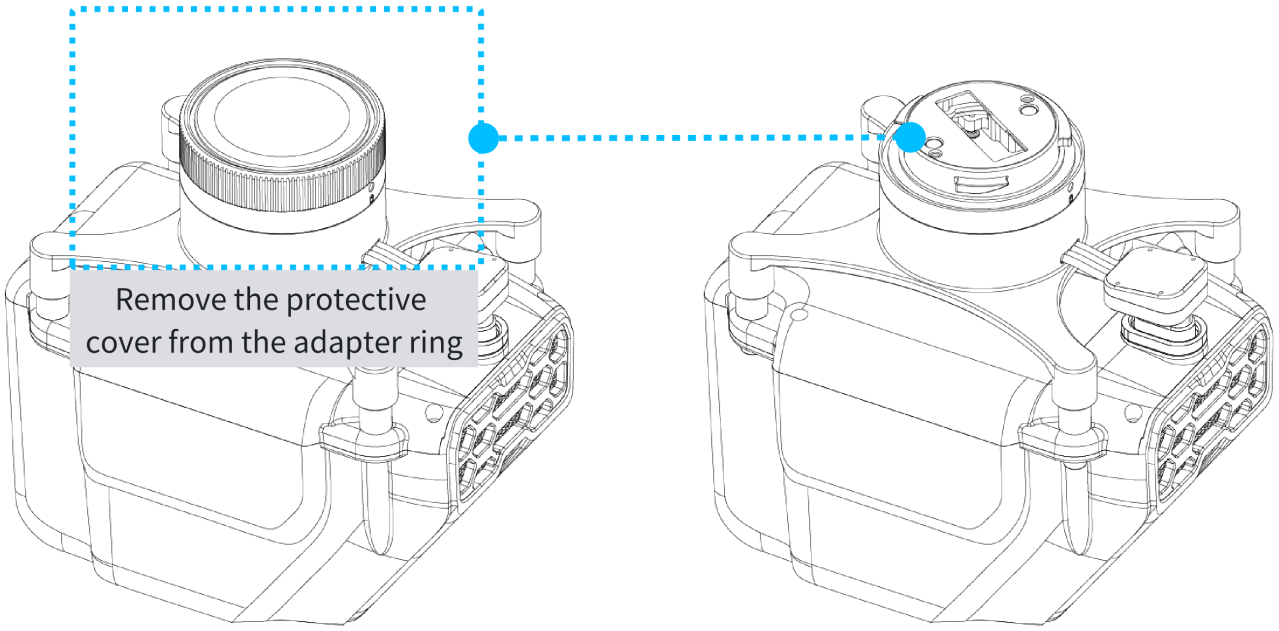

4. Align the white mark on the adapter ring of the Sniffer4D Nano 2 Plus Matrice 400 bracket with the red mark on the UAV gimbal interface. Insert it and rotate until the red marks are aligned to complete the

installation.

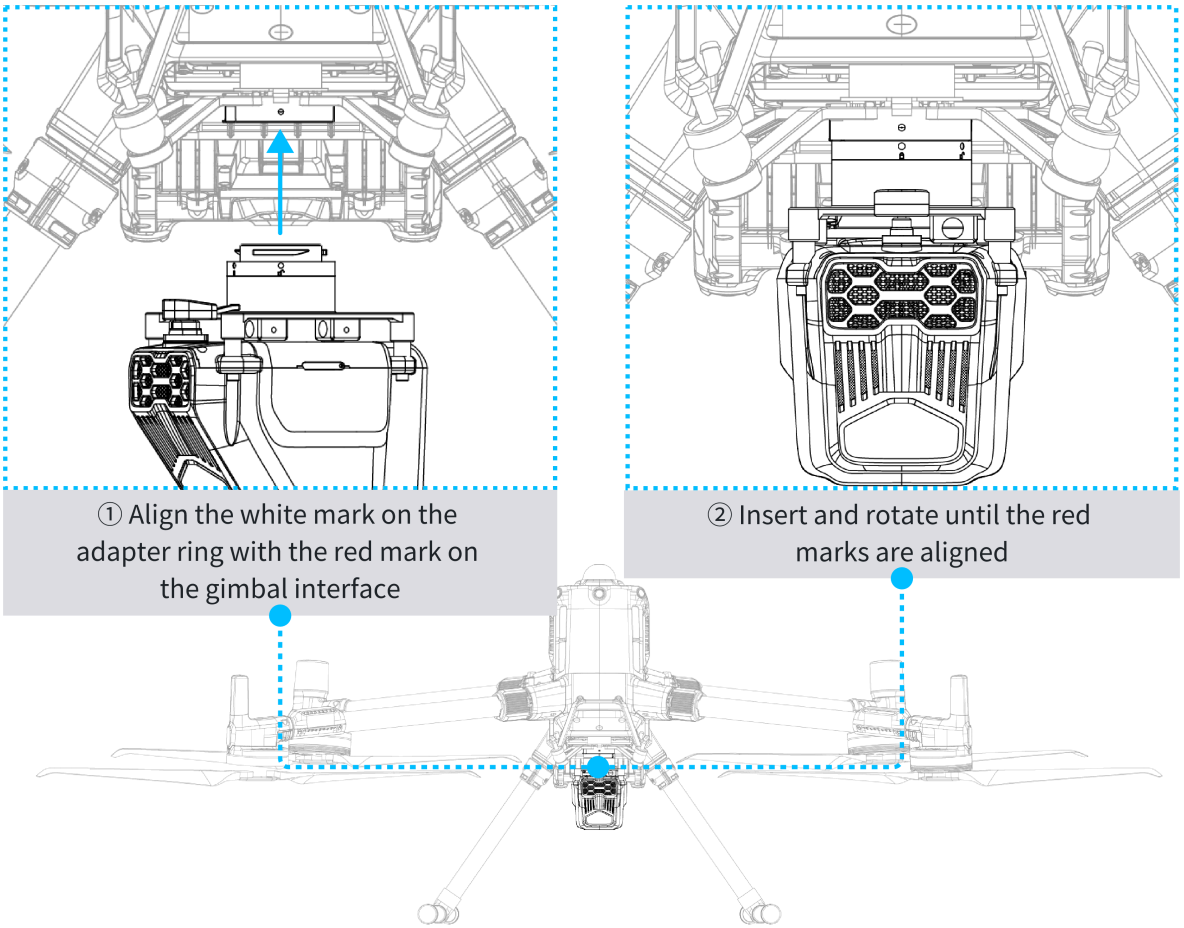

5. Power on the UAV. Use DJI Pilot 2 to view the real-time data of the Sniffer4D Nano 2 Plus and confirm that the device is operating normally.

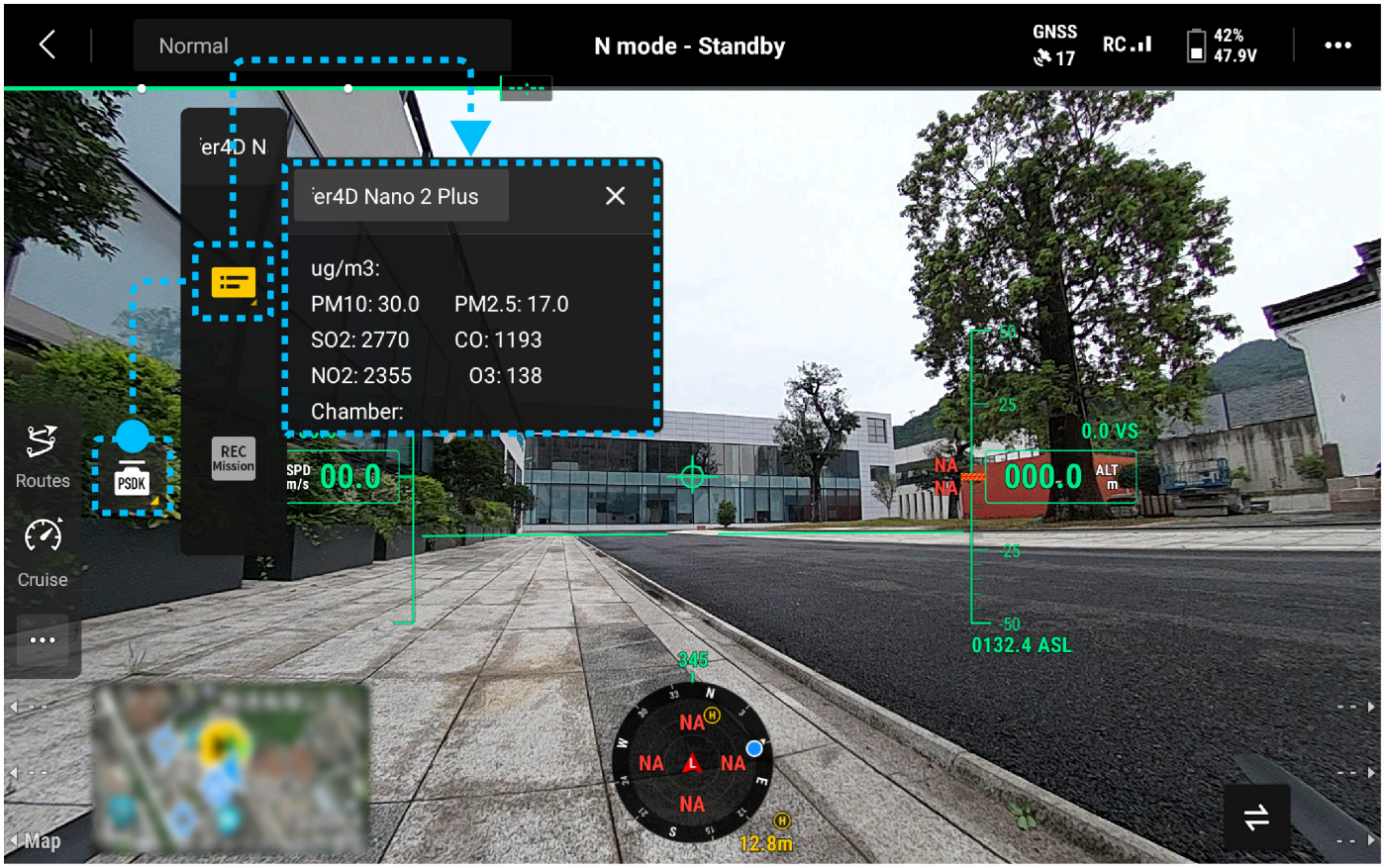

4.3.2 Sniffer4D Nano 2 Plus Methane-Only Version with Extended Sampling Tube

1. Connect the extended sampling tube to the corresponding interface on the Sniffer4D Nano 2 Plus Matrice 400 bracket. Tighten two M2.5 thumb screws to ensure the sampling tube is securely fixed with no looseness.

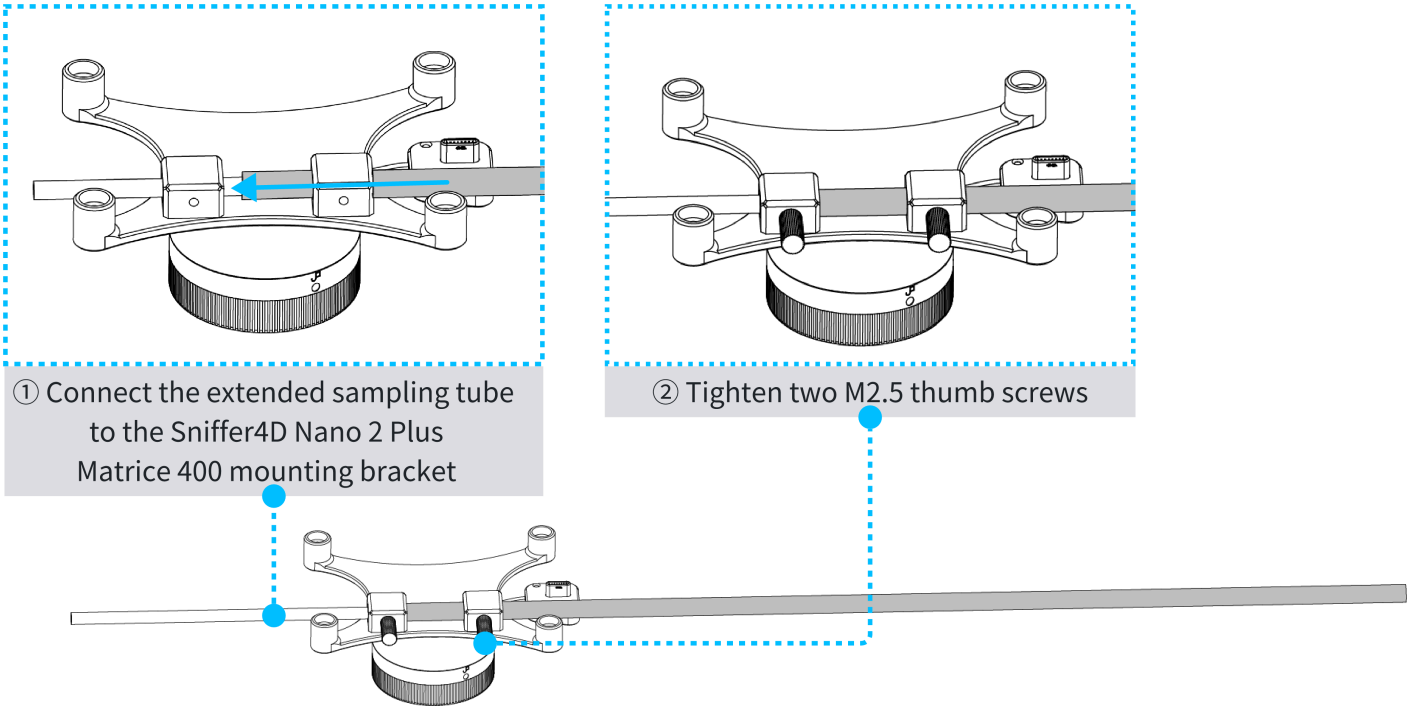

2. Align the four screw holes at the bottom of the Sniffer4D Nano 2 Plus Matrice 400 bracket with the screw holes on the main unit. Press down vertically until it is properly seated, then insert the adapter cable connector into the corresponding interface on the bracket and ensure it is securely connected.

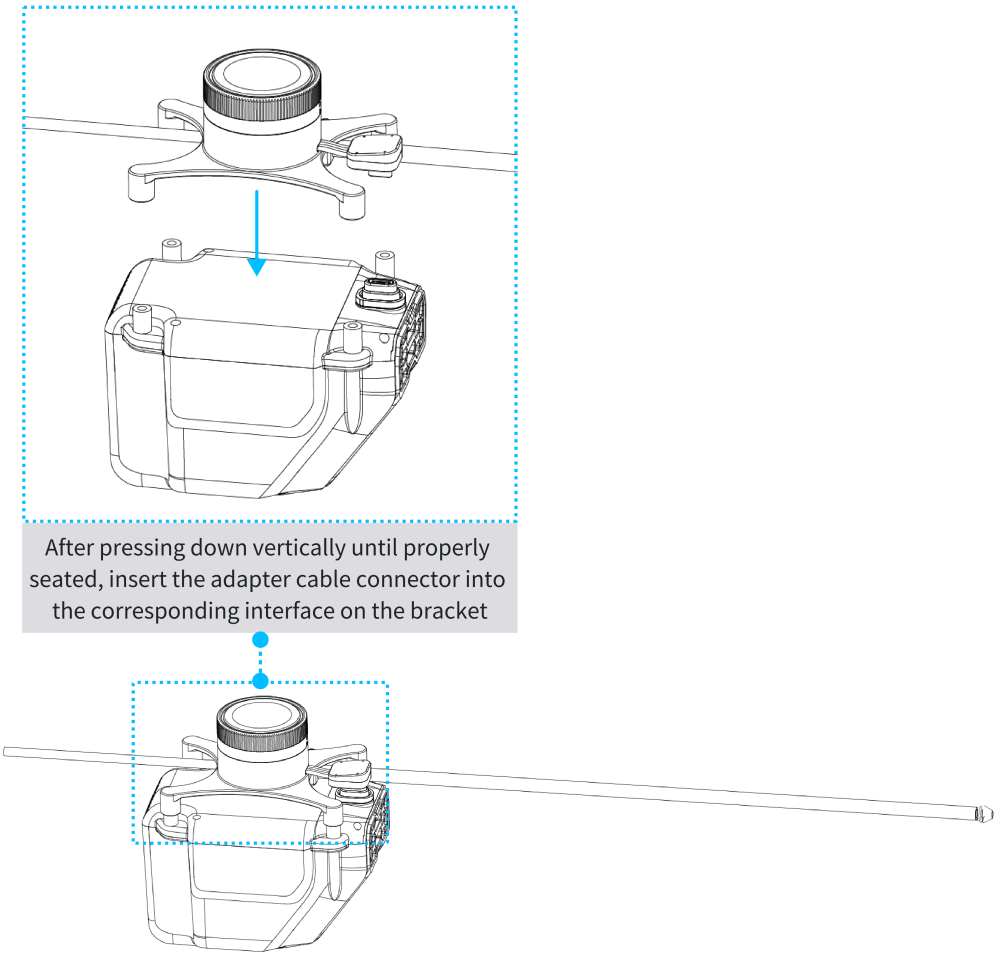

3. Use a hex key to tighten four M3 × 20 mm screws to secure the Sniffer4D Nano 2 Plus to the bracket.

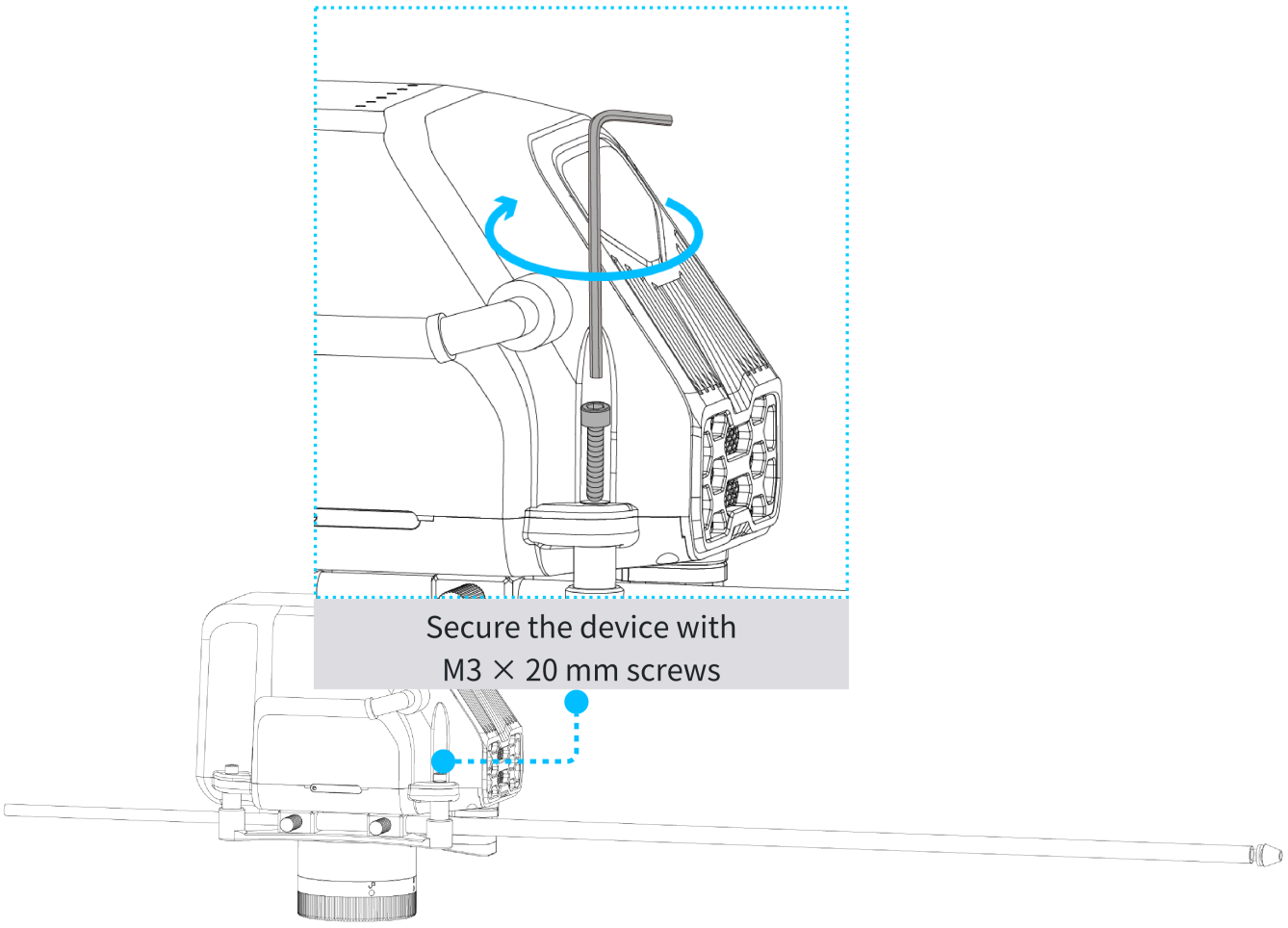

4. Insert the extended sampling tube into the quick connector until it is locked in place with no looseness. Then screw the gas tube quick connector clockwise into the air inlet of the main unit and tighten it to ensure proper sealing.

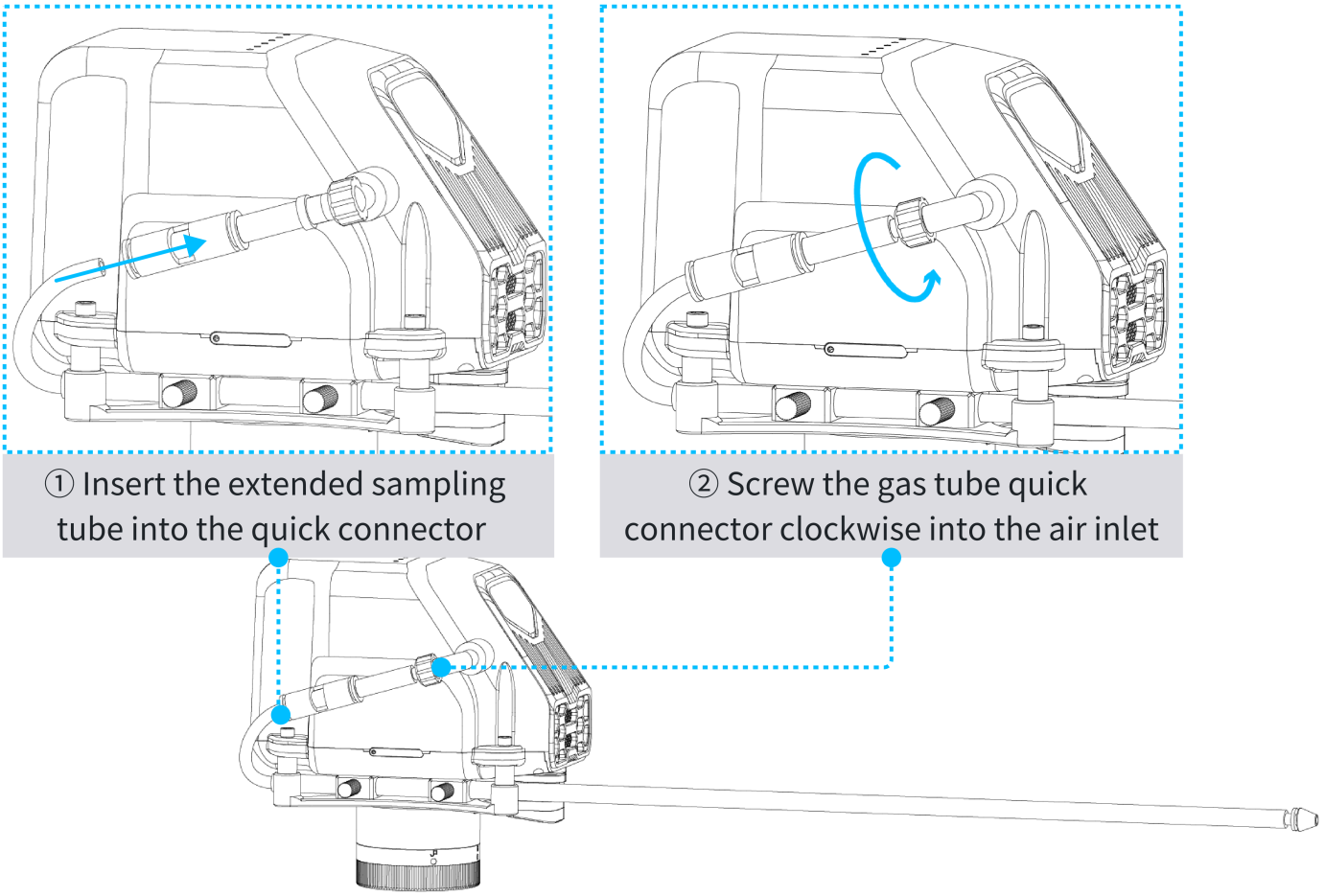

After completing the installation, power on the UAV. Once the device is operating normally, block the air inlet of the extended sampling tube by hand. At this point, the operating noise of the internal pump should increase noticeably, indicating that the tubing is properly sealed. If no noticeable change in noise is heard, there may be a leakage point in the gas path. Please check the airtightness of the gas path.

5. Remove the protective cover from the adapter ring of the Sniffer4D Nano 2 Plus Matrice 400 bracket.

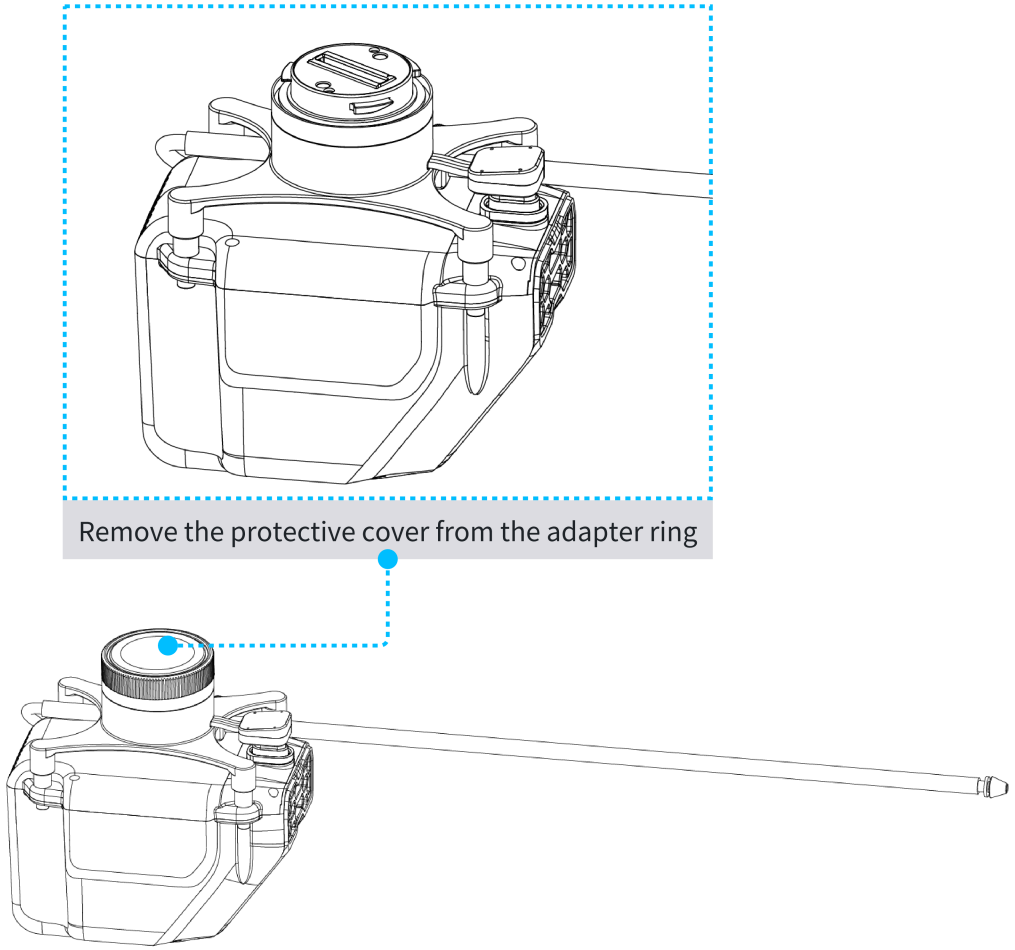

6. Align the white mark on the adapter ring of the Sniffer4D Nano 2 Plus Matrice 400 bracket with the red mark on the UAV gimbal interface. Insert it and rotate until the red marks are aligned to complete the installation.

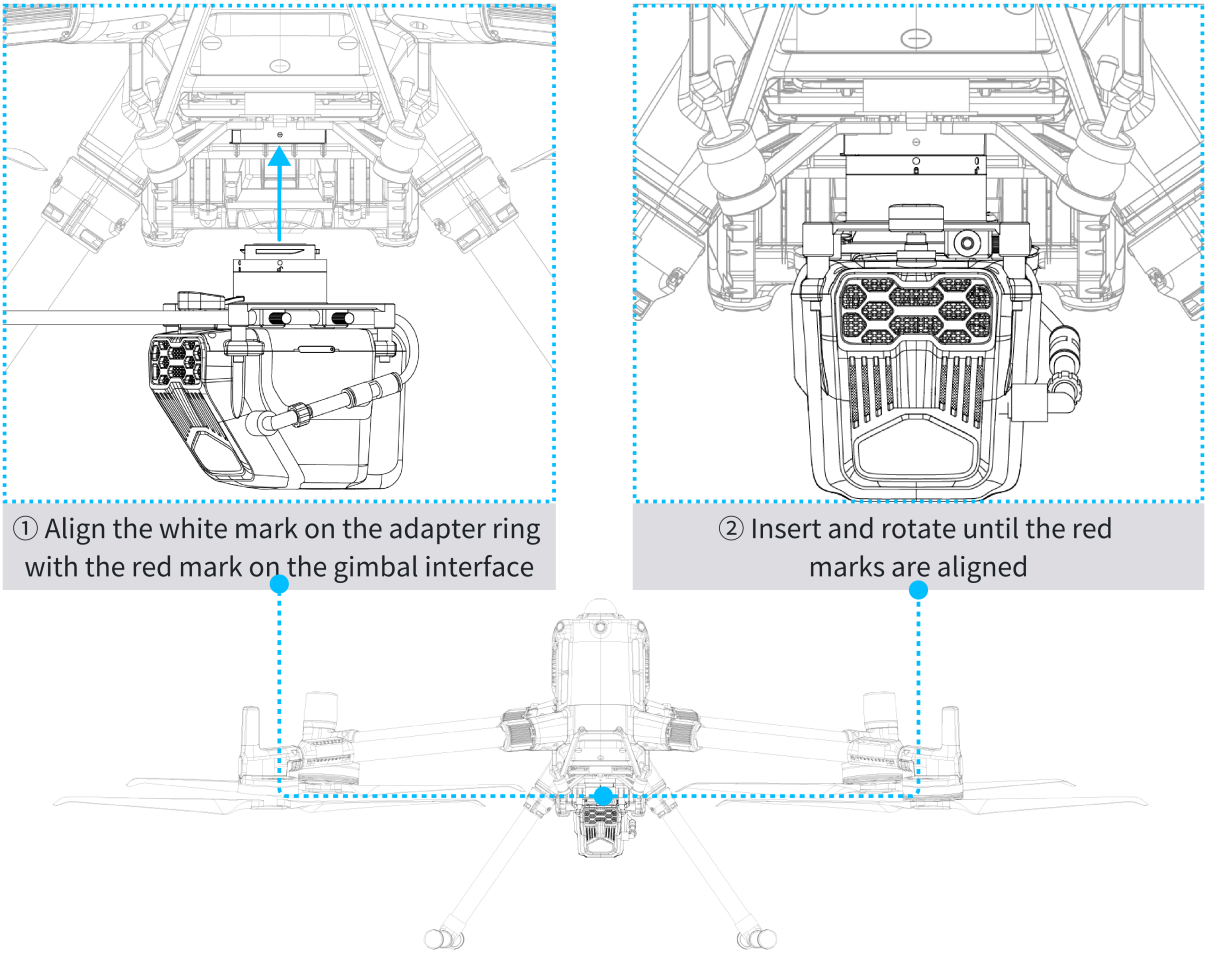

7. Power on the UAV. Use DJI Pilot 2 to view the real-time data of the Sniffer4D Nano 2 Plus and confirm that the device is operating normally.



4.4 Integration with DJI Matrice 30 / 30T

** Coming soon*

5. Getting Started with AIRINS.ai Software

> **"AIRINS.ai" Login Portal**: https://airins.ai
>
> **"AIRINS.ai" Detailed Tutorial**: https://learning.airins.com/aai

5.1 Register an account on AIRINS.ai (If you already have an AIRINS.ai account, you may skip this section 5.1)

1. Open your browser and navigate to the AIRINS.ai website: https://airins.ai.

2. On the Log In / Sign Up page, enter a valid email address and click "Log In / Sign Up".

3. Enter a valid invitation code and click "Submit". (If you do not have an invitation code, please contact your assigned AIRINS sales engineer to obtain one. Each invitation code is single-use only.)

4. Check your email inbox (including the spam / junk folder) for the 6-digit verification code, then enter it on the page. If the code does not arrive after a long time, click "Resend Verification Code" or check your spam

folder.

5. Set a login password (recommended: at least 8 characters, including letters and numbers).

6. Fill in your basic information (full name and organization / company name), then click "Submit".

You can now log in to AIRINS.ai using your email and password.

> ❗ We recommend using a commonly used and secure email address for easier account recovery in the future.

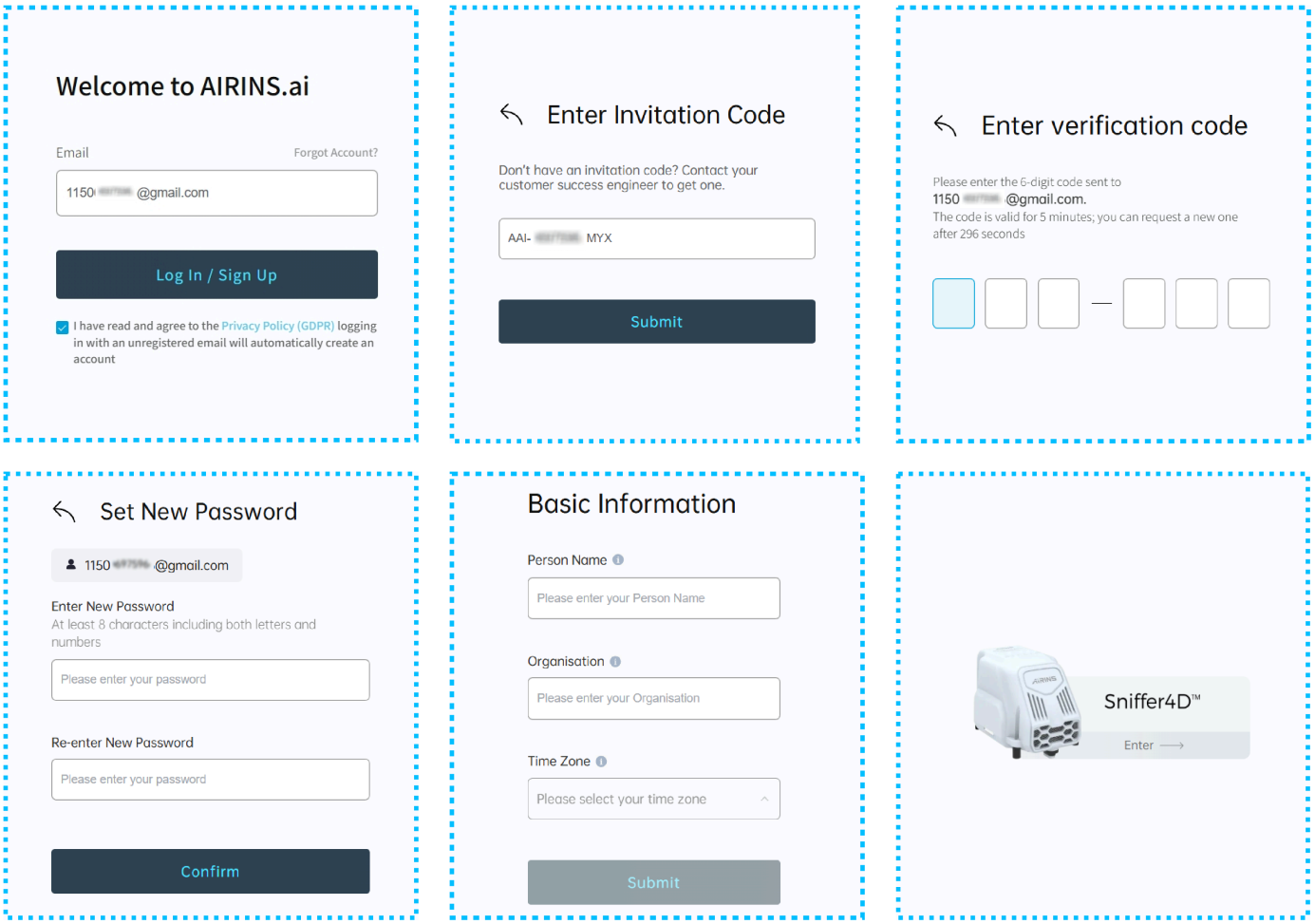

5.2 Bind Your Sniffer4D Nano 2 Plus to Your AIRINS.ai Account

1. Log in to the AIRINS.ai web portal using your registered email and password.

2. On the homepage, click the "Bind Device" button.

3. In the input fields, enter the device's serial number (found on the label on the side of the device) and assign a device nickname.

4. Click "Confirm Binding". Once the system verifies the information, the binding is complete.

- The device's serial number is a unique identifier — it is always in lowercase and '0' is always number '0' not letter 'o'.
- After successful binding, the device information will appear in the "Real-Time", where you can view its status and data in real time.

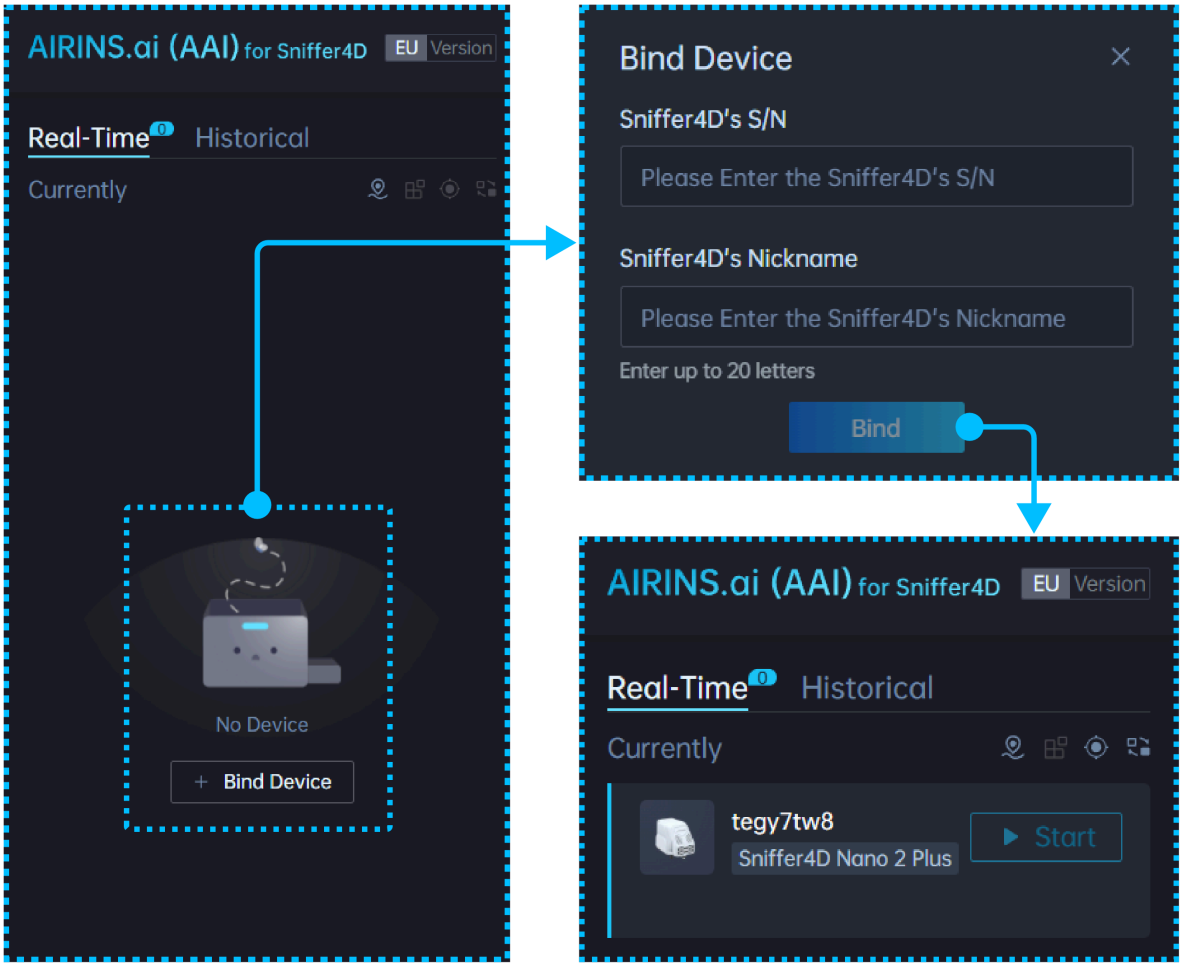

5.3 AIRINS.ai Detailed Tutorial

For more in-depth guidance and learning resources, please click the link below to access the detailed & interactive tutorial page.

AIRINS.ai Detailed Tutorial

6. Executing a Typical Monitoring Mission

6.1 Executing a Typical Automated Waypoint Monitoring Mission Using DJI Dock 3

& DJI FlightHub 2

- This section requires the operator to be proficient with DJI Dock 3 and DJI FlightHub 2.
- This workflow requires Sniffer4D to **have Internet access over 4G** during the mission.
- To ensure data quality, the following is recommended during missions:
  - Flight altitude: **keep below 100 m, and as low as safely possible** to stay close to ground-level emission sources.
  - Flight speed: **set to approximately 5 m/s (the lower the more accurate emission source localization)**; do not exceed 8 m/s.
  - During flight: **avoid sudden acceleration, braking, sharp turns, rapid climbs, and rapid descents**.

1. Follow the installation steps in Section 4.1 of this guide to install the Sniffer4D Nano 2 Plus onto the DJI Matrice 4D / 4TD aircraft in DJI Dock 3.



- The temperature inside DJI Dock 3 is typically very different from the ambient environment. When the UAV first takes off, the Sniffer4D Nano 2 Plus may experience **rapid temperature changes, which can cause noticeable zero-point drift in the monitoring data** (see Section 8.3 for details).
- To ensure accurate and reliable monitoring data, allow the Sniffer4D Nano 2 Plus to **warm up for at least 3 minutes until the temperature stabilizes** before starting a mission.

2. Based on the flight route planned by DJI FlightHub 2 and the area where automated operations are required, **configure the mission start zone and mission end zones** in AIRINS.ai. The Sniffer4D Nano 2 Plus will then: (1) automatically start mission recording, and (2) automatically stop mission recording based on these settings.

As illustrated below, when the Sniffer4D Nano 2 Plus is not recording and passes through the blue circle (start mission zone), it will automatically start recording. When a mission is in progress and the device passes through the red circle (end mission zone), it will automatically stop recording.

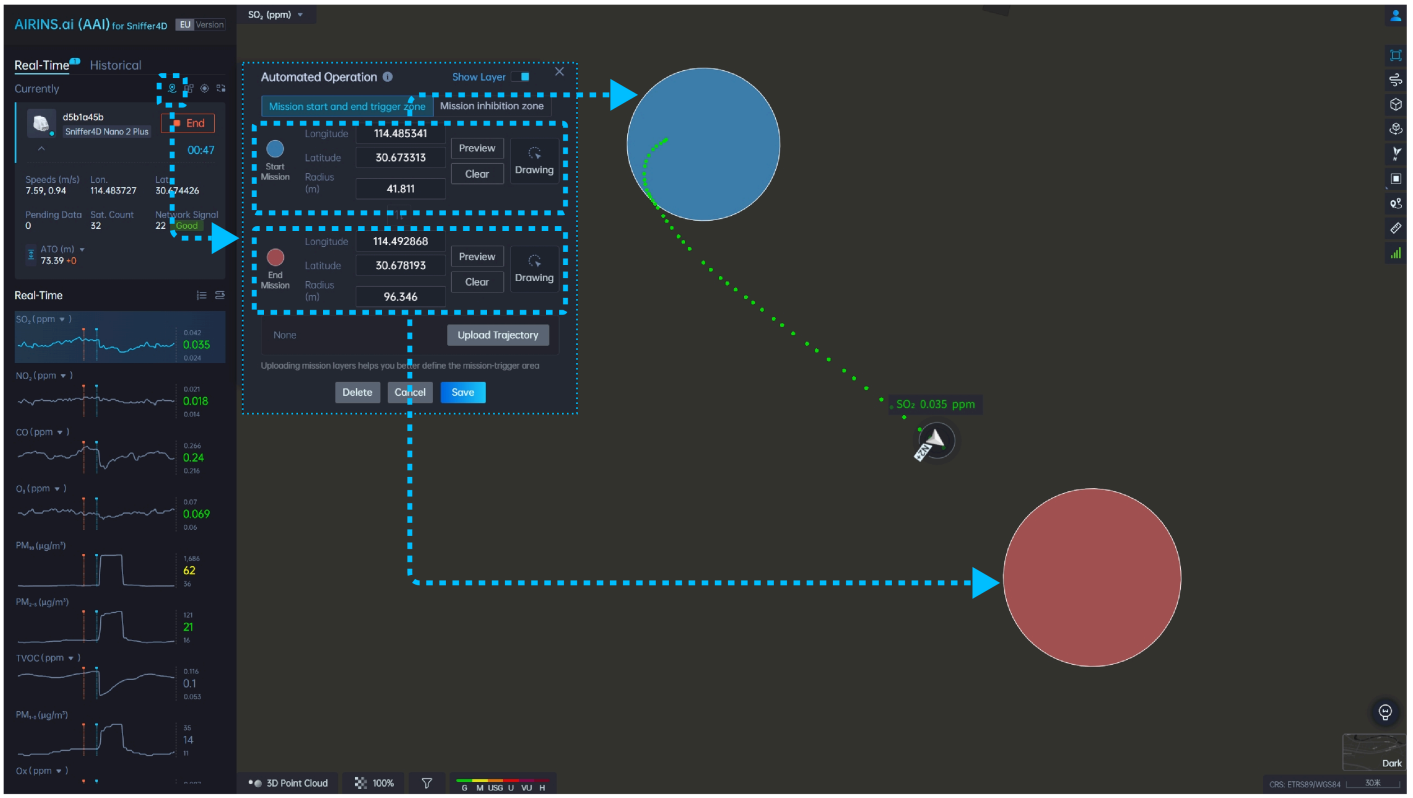

- If the mission start zone is not configured correctly in AIRINS.ai, monitoring data may not be recorded, or the recording may be incomplete.
- If the mission end zone is not configured correctly in AIRINS.ai, the mission may contain excess data.

3. Start the automated flight route in DJI FlightHub 2.

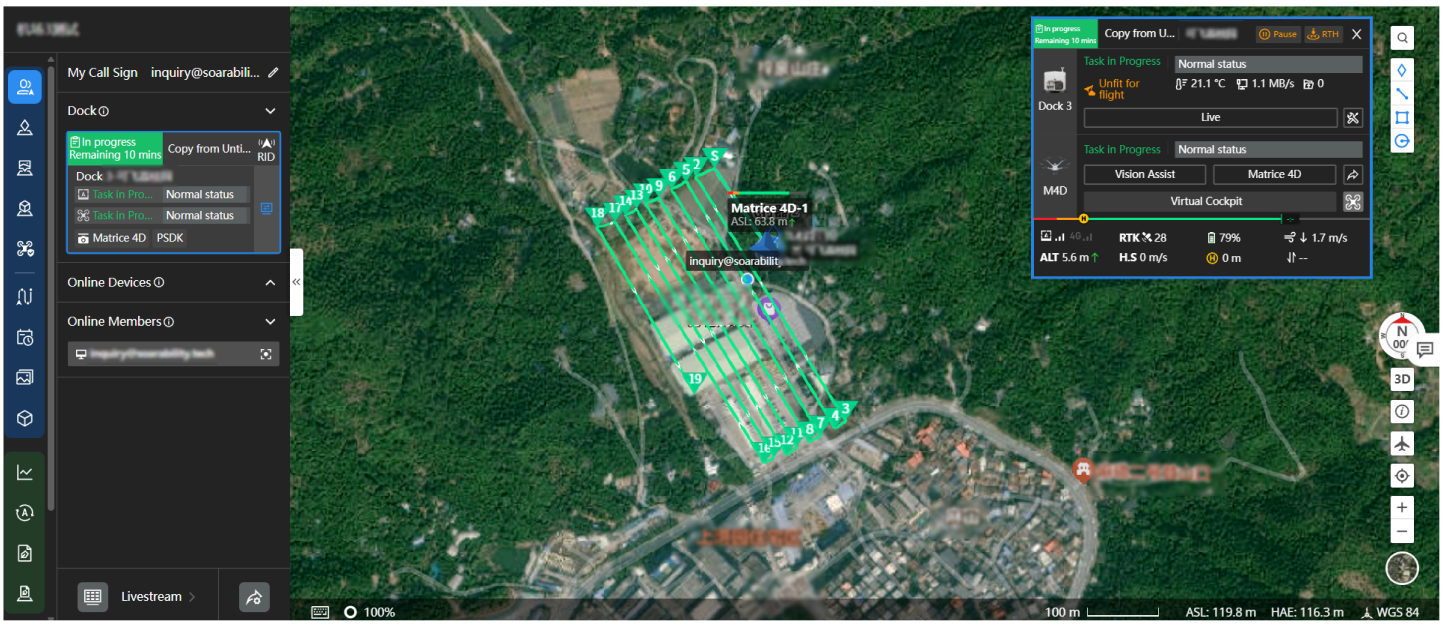

4. During the mission, real-time monitoring data from the Sniffer4D Nano 2 Plus can be viewed in the Virtual Cockpit on DJI FlightHub 2 via the PSDK widget panel. You may also view the real-time mission status on AIRINS.ai (Sniffer4D is required to have Internet access over 4G).

DJI FlightHub 2

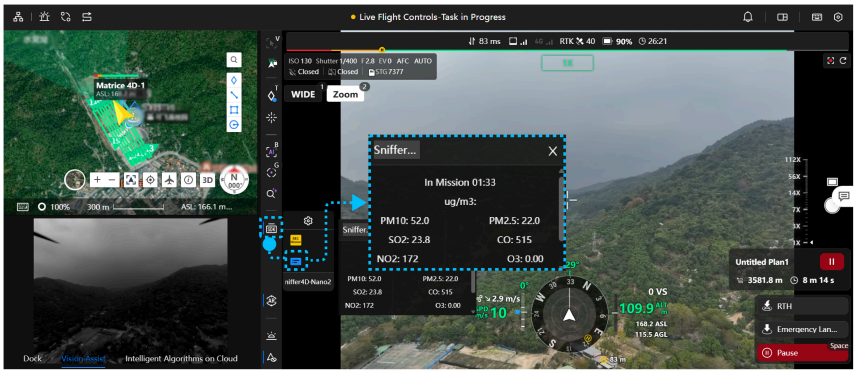

AIRINS.ai



5. After the mission is complete, historical missions can be reviewed on AIRINS.ai at any time. The default naming format for historical missions is: "Serial Number_Mission Start Date_Mission Start Time".



> ❗ If Sniffer4D does not have Internet access over 4G during the mission, there will not be historical missions stored in AIRINS.ai. You may take out the SD card from Sniffer4D, copy the backup mission files on the SD card to a computer, and then manually upload the mission files to AIRINS.ai for analysis.

6.2 Executing a Typical Manual Flight Monitoring Mission

> ❗ This section uses DJI Matrice 4E / 4T as an example. Similar procedures also apply if you are using DJI Matrice 400.

> ❗ To ensure accurate and reliable monitoring data, **allow the Sniffer4D Nano 2 Plus to warm up for at least 3 minutes until its temperature stabilizes** before starting a mission.

- This workflow requires Sniffer4D to **have Internet access over 4G** during the mission.
- To ensure data quality, the following is recommended during missions:
  - Flight altitude: **keep below 100 m, and as low as safely possible** to stay close to ground-level emission sources.
  - Flight speed: **set to approximately 5 m/s (the slower the more accurate emission source localization)**; do not exceed 8 m/s.
  - During flight: **avoid sudden acceleration, braking, sharp turns, rapid climbs, and rapid descents**.

1. Following the installation steps in Section 4.2 of this guide, install the Sniffer4D Nano 2 Plus onto the UAV and complete the pre-flight checks.



2. Open DJI Pilot 2, navigate to the flight interface, and tap the PSDK widget panel to view device information and confirm the device is operating normally.



3. Tap the mission recording icon in the PSDK widget to start recording the mission. (The icon background **will then turn yellow** and the panel will then display "Mission in Progress".) Maneuver the UAV to make full contact with the gas plume in the target area to collect georeferenced concentration data.



4. During the mission, real-time monitoring data can be viewed via the PSDK widget panel at any time. You may also view the real-time mission status on AIRINS.ai (Sniffer4D is required to have Internet access over 4G).

DJI Pilot 2

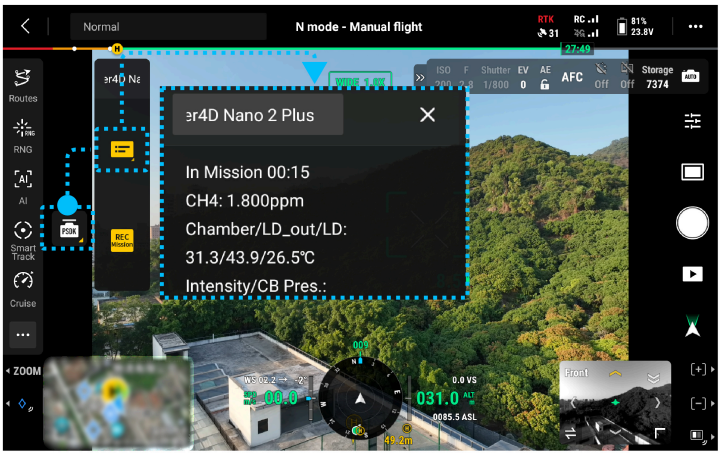

AIRINS.ai

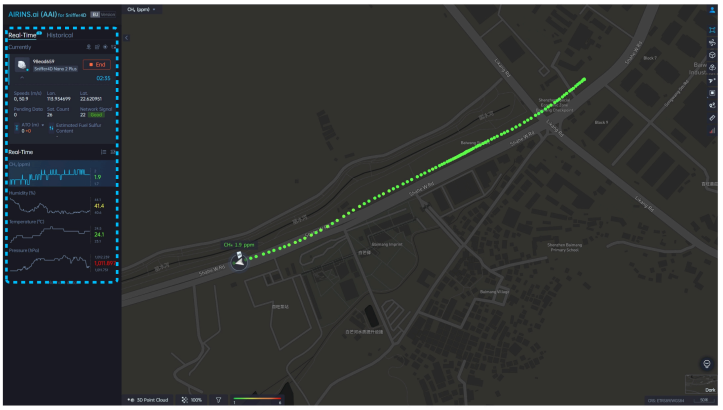

5. Once the operation is complete, tap the mission icon in the PSDK widget to stop recording the mission. (The icon background **will then turn grey** and "Mission in Progress" will then no longer be displayed on the panel.)



6. After the mission is complete, historical missions can be reviewed on AIRINS.ai at any time. The default naming format for historical missions is: "Serial Number_Mission Start Date_Mission Start Time".



> ❗ If Sniffer4D does not have Internet access over 4G during the mission, there will not be historical missions stored in AIRINS.ai. You may take out the SD card from Sniffer4D, copy the backup mission files on the SD card to a computer, and then manually upload the mission files to AIRINS.ai for analysis.

6.3 Executing a Typical Vehicle-Based Monitoring Mission

** Coming soon*

> ❗ This workflow requires Sniffer4D to **have internet access over 4G** during the mission.

7. Sniffer4D Nano 2 Plus Local Firmware Upgrade & Calibration

7.1 Firmware Upgrade

1. Go to the AAI Real-Time Panel and click the Firmware Management icon to check whether a newer firmware version is available for your Sniffer4D Nano 2 Plus. This page only displays the latest firmware version.

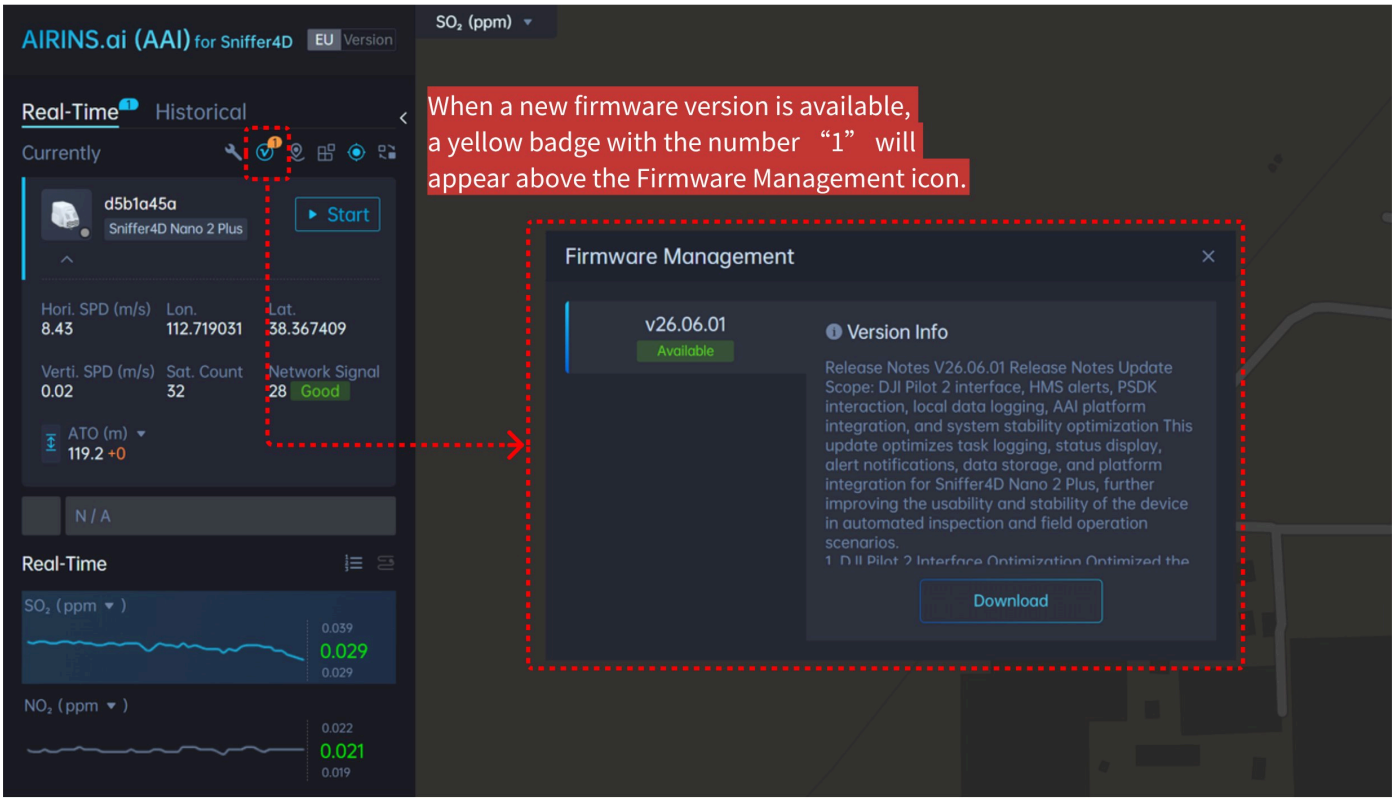

2. If a newer firmware version is available, click Download and save the firmware package to your local computer.

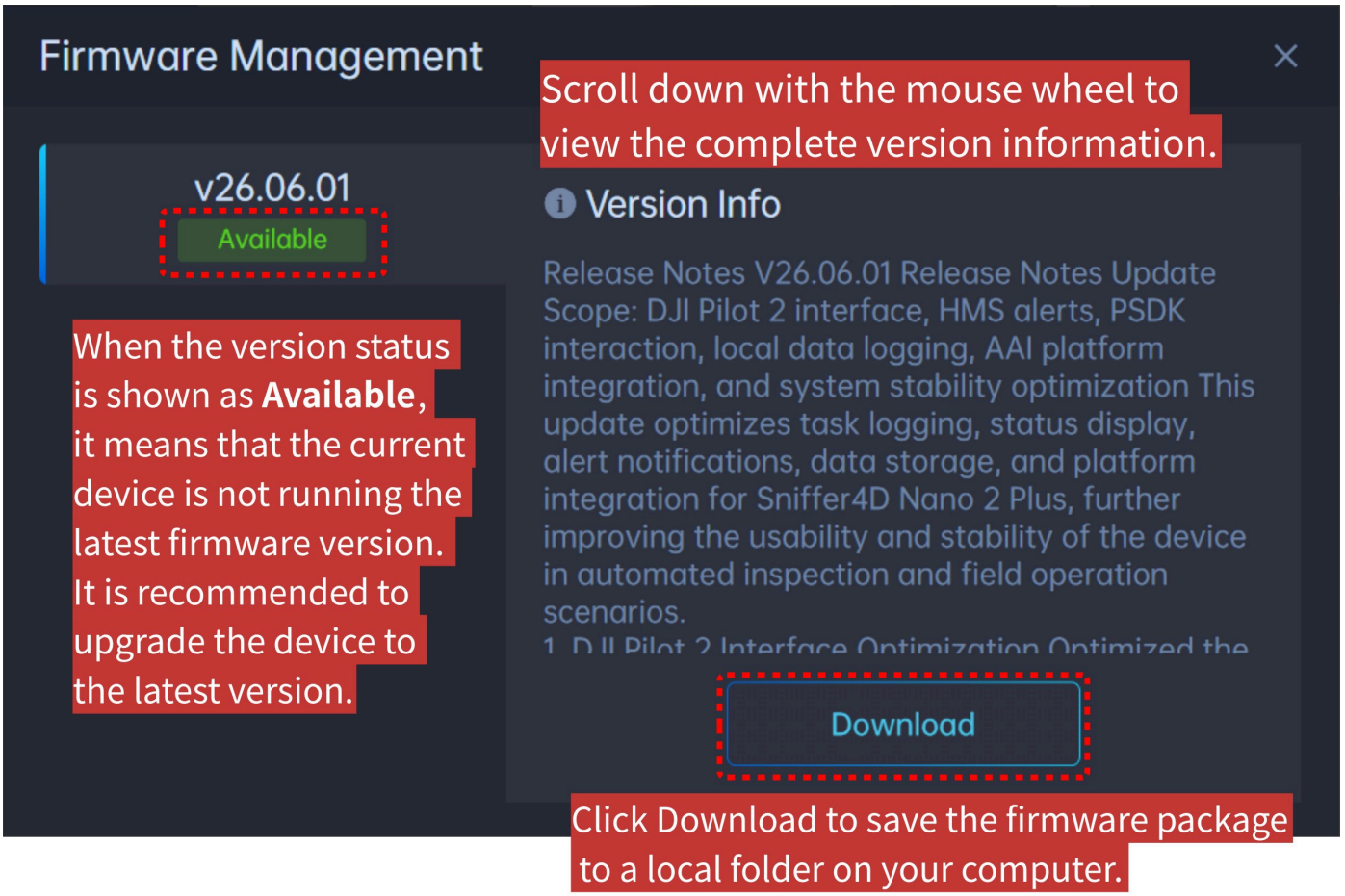

3. After extracting the downloaded firmware file (.zip), you will see three firmware files (.zip) for different versions of Sniffer4D Nano 2 Plus:

- Multi-Gas version,
- Methane-Only version,
- TSP-Only version.

Select the firmware file that matches your device version and extract it again. The extracted `nano2+.bin` file is the firmware file used for the device upgrade.

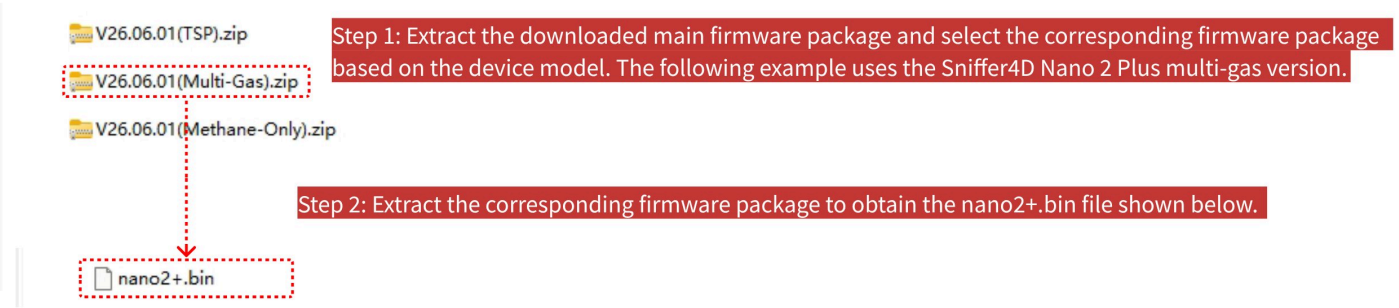

4. Ensure your Sniffer4D Nano 2 Plus is powered off, then remove the SD card from the device.

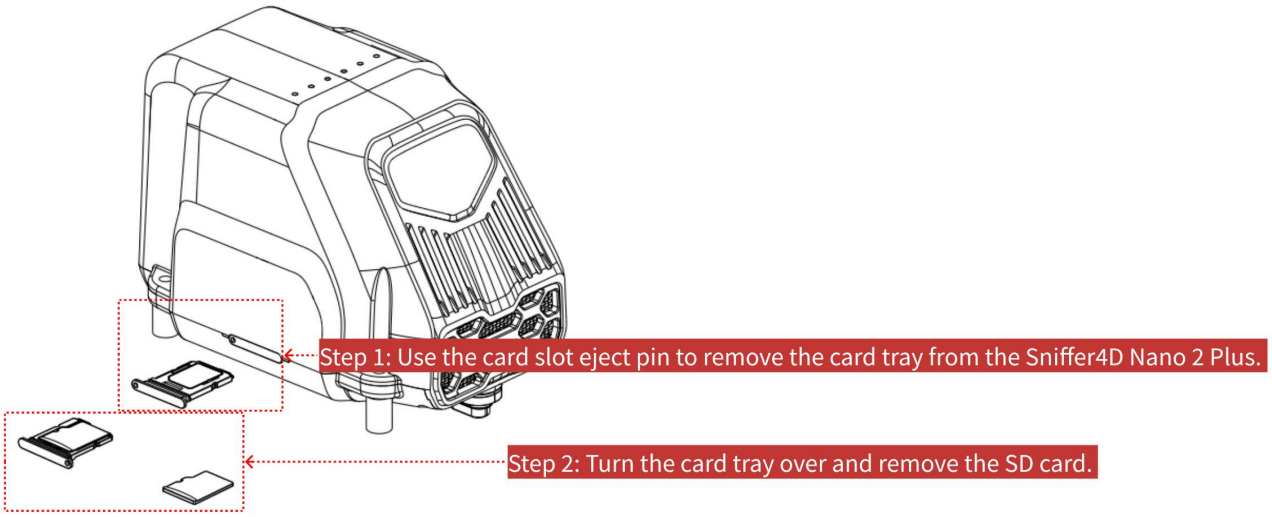

5. Use a card reader to connect the SD card to your computer. Open the corresponding SD card drive and copy the downloaded firmware file to the 'Upgrade' folder on the SD card. If the folder does not exist, create a new folder named 'Upgrade'.

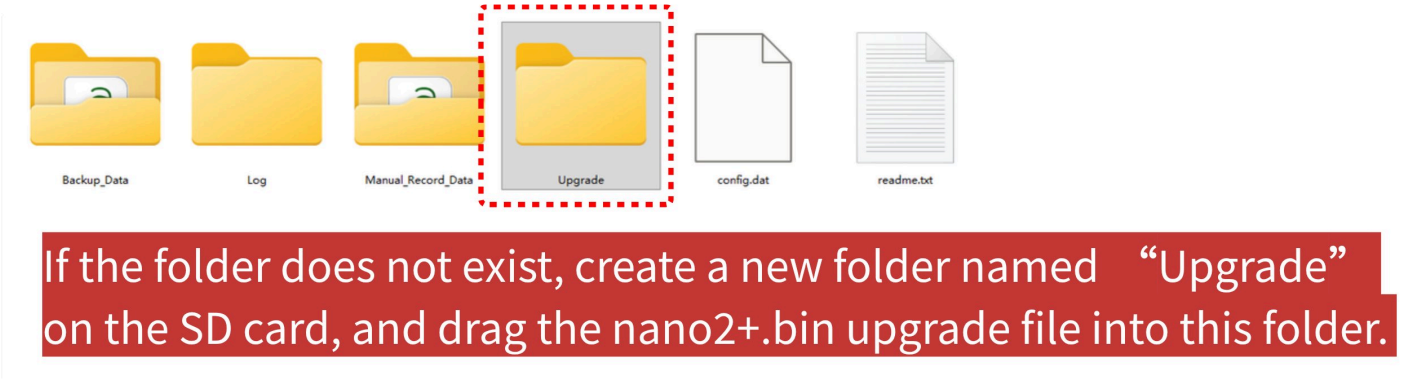

6. After the firmware file has been copied, safely eject the SD card from the computer and insert it back into the Sniffer4D Nano 2 Plus.

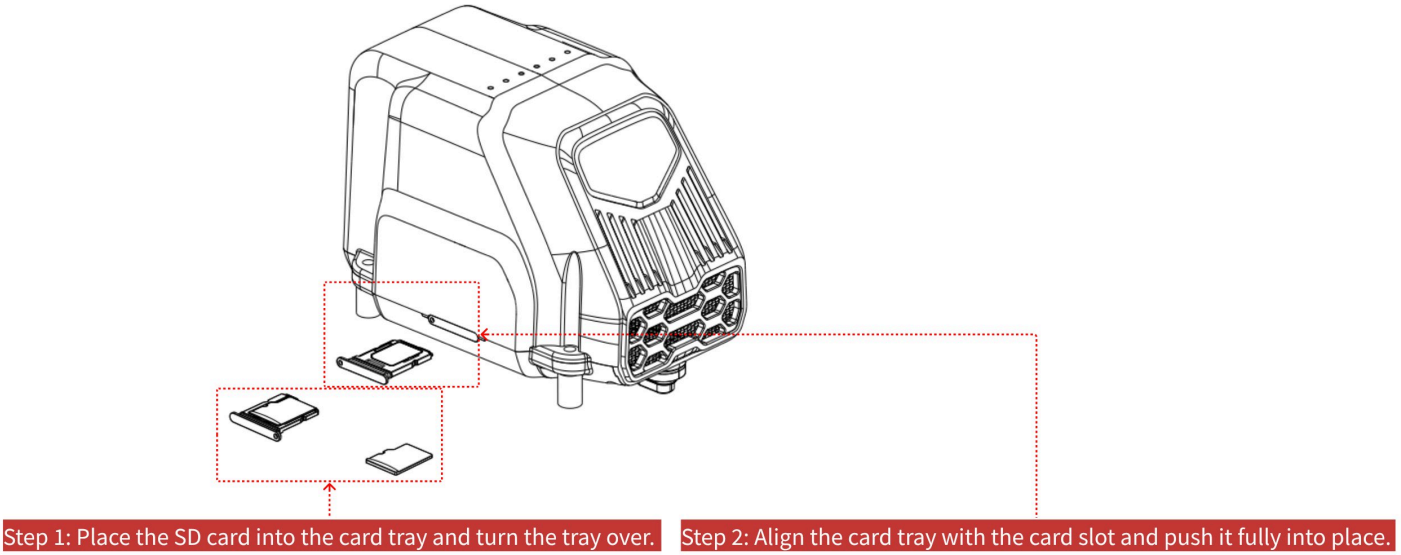

7. Power on the Sniffer4D Nano 2 Plus. The device will automatically detect the firmware file and start the upgrade process. The upgrade takes approximately 5 minutes. During this process, the status LEDs will blink in sequence (except for the 4G LED). Do not power off the device or remove the SD card during this period.

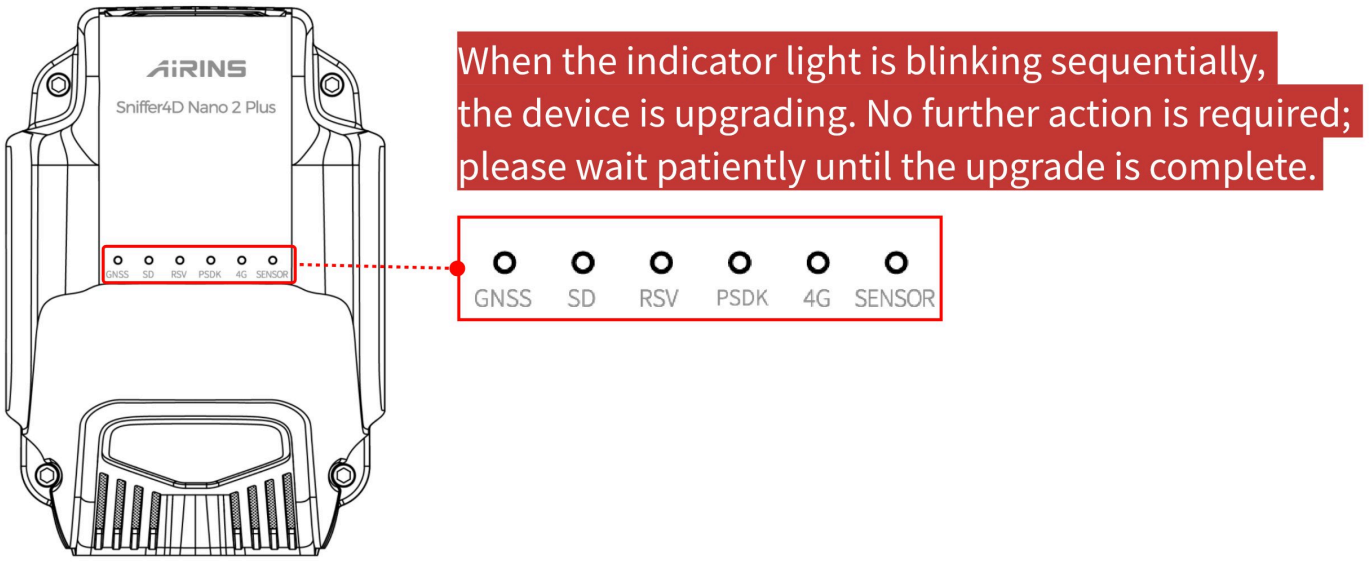

8. When the device's status LEDs return to its normal status, manually restart the Sniffer4D Nano 2 Plus. After the restart is complete, the firmware upgrade is finished.

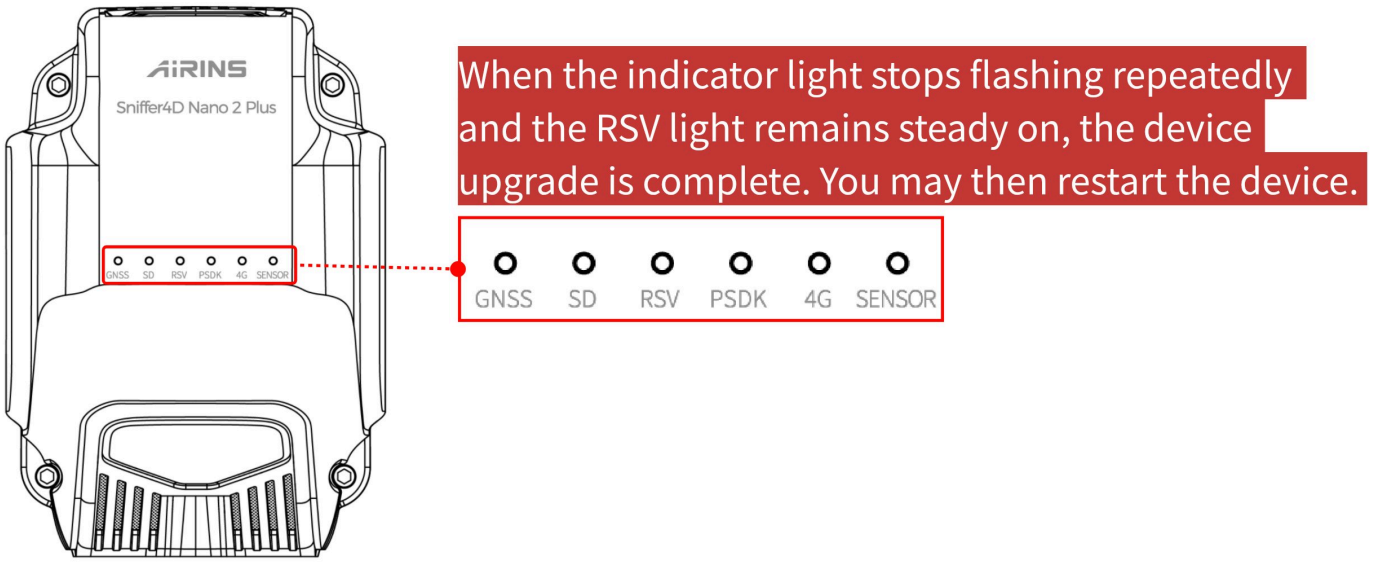

7.2 Calibration Principles

- Under ideal conditions, the measured values are consistent with the actual concentrations, as shown in the diagram below.

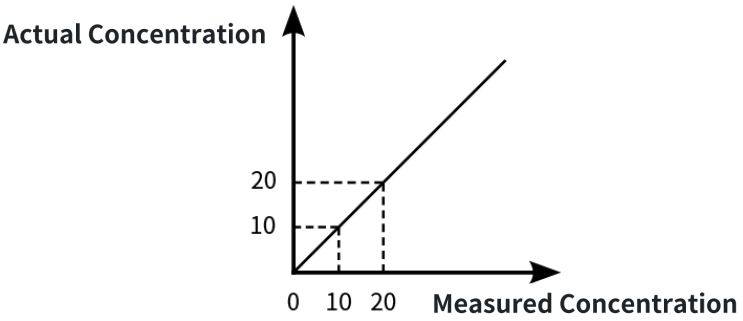

- In practice, however, due to limitations in monitoring methods, significant differences in local environmental parameters (such as temperature, humidity, and atmospheric pressure), and inconsistent standards across regions, the measured concentrations may not match the actual concentrations — though a certain correlation (trend alignment) exists. An example is shown below.

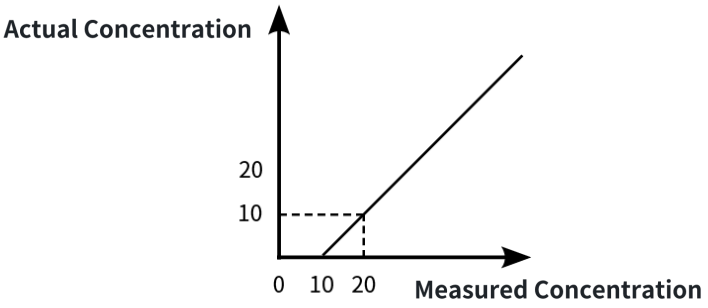

- Calibration is the process of applying calibration parameters to the measured concentrations so that the calibrated values more closely match the actual concentrations, as shown below.

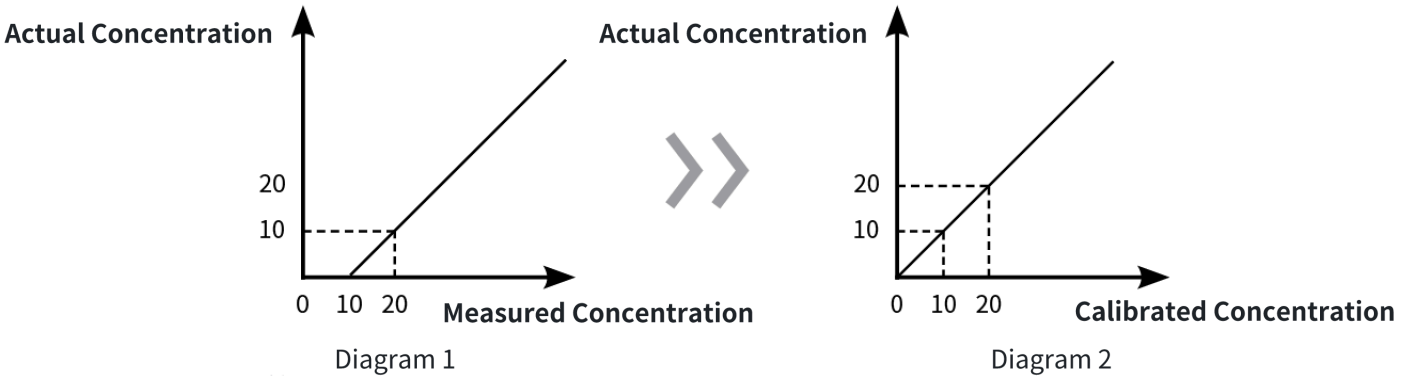

Diagram 1 Diagram 2

- In the Sniffer4D Nano 2 Plus, the calibration formula is as follows:
  - (Raw Value + Zero-Point Offset) × Sensitivity Calibration Factor = Calibrated Value
  - The Sensitivity Calibration Factor and Zero-Point Offset are the two calibration parameters, defined as follows:

    - Sensitivity Calibration Factor: The slope of the line in Diagram 2 divided by the slope of the line in Diagram 1. Default value: 1.
    - Zero-Point Offset: When the Sensitivity Calibration Factor is at its default value and the actual concentration is 0, this is the negative of the measured concentration value. Default value: 0.
- Prior to shipment, AIRINS performs rigorous precision calibration on specific monitoring modules (using the long-term data comparison method — see the calibration report) and writes the corresponding calibration parameters to the device. Due to significant environmental differences across regions, inconsistent standards, and device aging, some measurement deviation may occur over time. If this happens, you may carefully adjust the calibration parameters yourself.

> ❗ Incorrect calibration parameters can cause severe data distortion. **Do not attempt to calibrate the device unless you have a thorough understanding of the content in this section**.

7.3 Rough Calibration

- Rough Calibration for Light-Scattering (Particulate Matter) Monitoring Modules
    - For light-scattering monitoring modules (such as the PM particulate matter module), rough calibration assumes that the Zero-Point Offset does not require adjustment — only the Sensitivity Calibration Factor needs to be calibrated. This method is simple, fast, and yields good marginal results.
    - Steps:

      1. Place the device near the monitoring point of a reference instrument (e.g. a national standard monitoring station or another instrument with reliable data), at the same height as the reference instrument where possible, and power on the device.

      2. Connect the device to AIRINS.ai, and navigate to the calibration interface. Select the light-scattering monitoring module you wish to calibrate (e.g. PM particulate matter, TSP), and tap the module to enter the module calibration page.

      > ❗ Ensure the Sniffer4D Nano 2 Plus and the reference instrument are in a very similar environment (sampling the same air). For example, if the Sniffer4D Nano 2 Plus is placed at shoulder height on a roadside while the reference instrument is on the rooftop of a nearby building, the two locations — though physically close — have notably different environments (roadside particulate concentrations are typically higher than those at elevation). In such cases, the reference instrument's readings are not suitable for calibrating the Sniffer4D Nano 2 Plus.

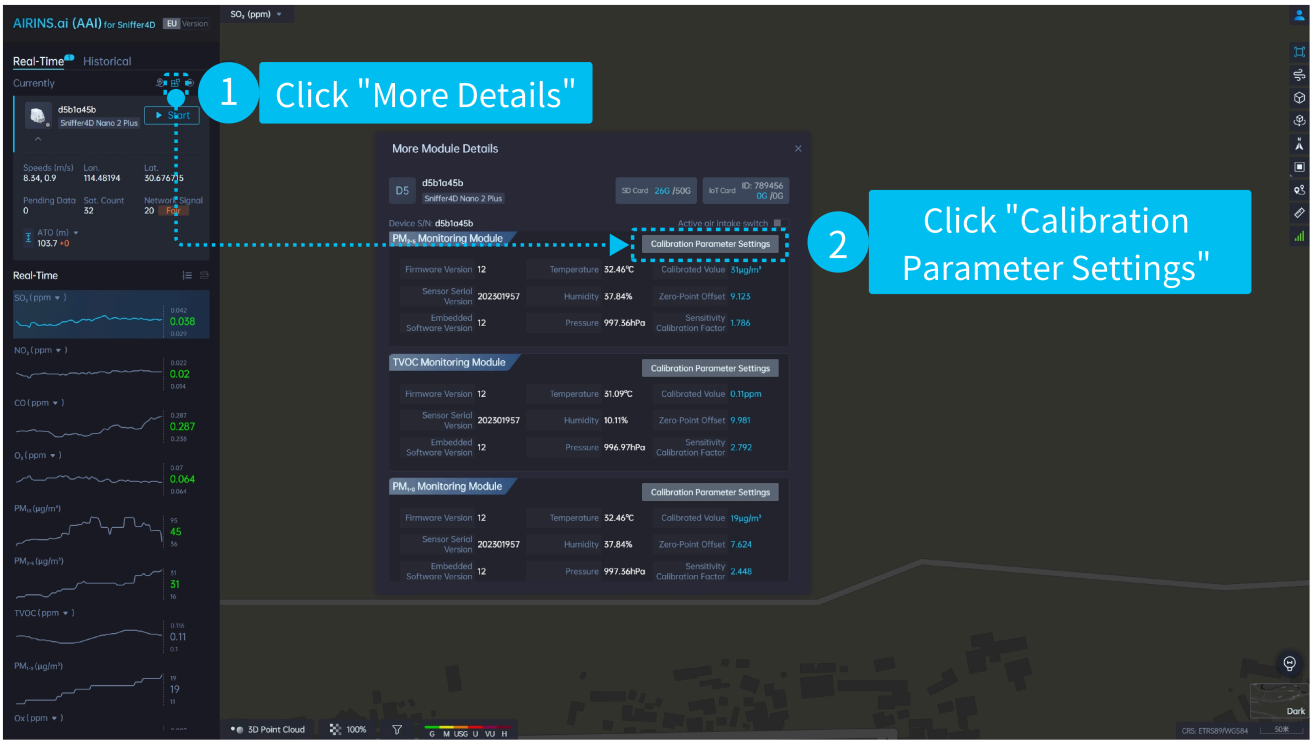

> ❗ As different monitoring modules require different warm-up times, **please wait until the concentration readings have fully stabilized before proceeding with calibration**.

3. Calculate the new Sensitivity Calibration Factor using the formula shown below.

$$\text{New Sensitivity Calibration Factor} = \frac{\text{Reference Instrument Concentration} \times \text{Current Sensitivity Calibration Factor *}}{\text{Current Calibrated Concentration of Sniffer4D Nano 2 Plus}}$$

4. Using the reference instrument, obtain the corresponding monitoring value and apply the formula to calculate the new Sensitivity Calibration Factor. Enter the new value into the Sensitivity Calibration Factor input field in the module calibration interface, then tap "Upload".

- The "Current Sensitivity Calibration Factor" refers to the value currently shown in the interface. For example, in the sample screenshot, the Sensitivity Calibration Factor for $PM_{2.5}$ is 1.
- This value is for illustration purposes only and should not be used as a reference for calibrating your Sniffer4D Nano 2 Plus.

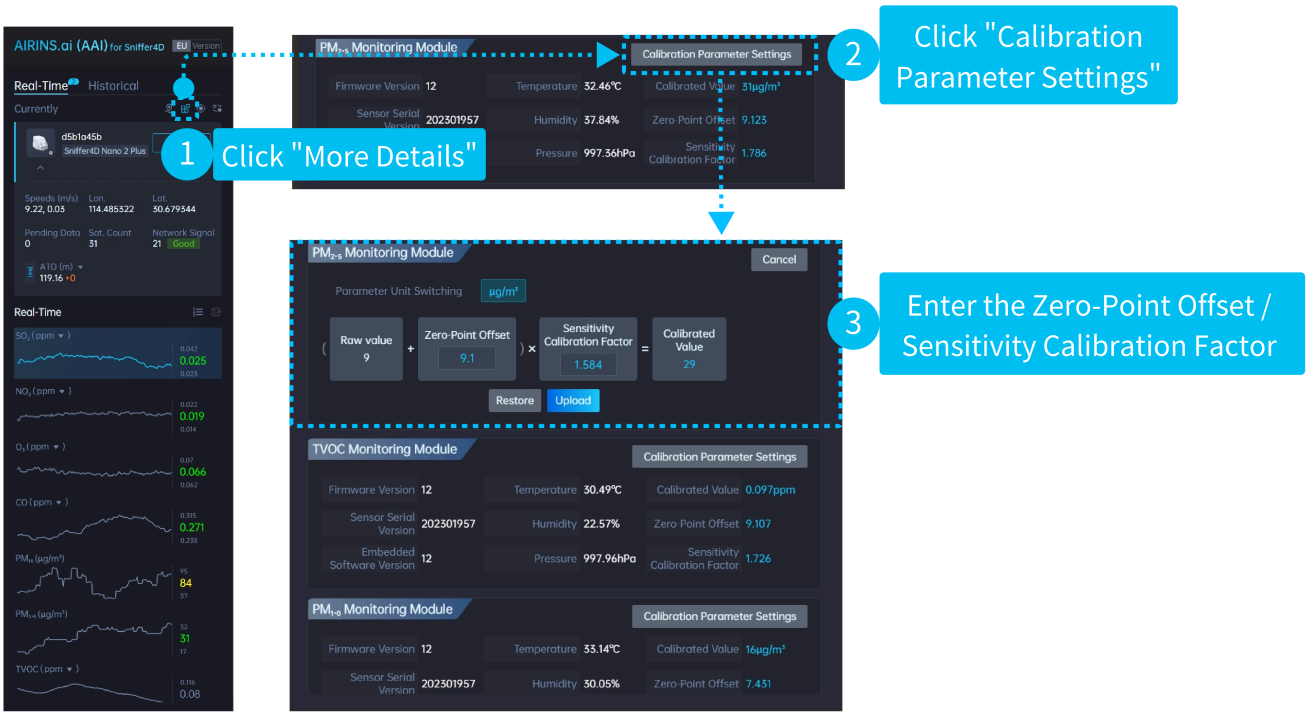

- Rough Calibration for Non-Light-Scattering Monitoring Modules
  - For non-light-scattering monitoring modules, rough calibration assumes that the Sensitivity Calibration Factor does not require adjustment — only the Zero-Point Offset needs to be calibrated. This method is simple and fast.
  - Steps:

    1. For steps on connecting to the device and navigating to the calibration interface, refer to the rough calibration steps for light-scattering (particulate matter) monitoring modules above.

    2. In the device module details, select the non-light-scattering monitoring module you wish to calibrate (e.g. CO, SO_2, NO_2, TVOC, O_3+NO_2, H_2S, NH_3, HCHO, etc.), and tap Calibration Parameter Settings to enter the module calibration interface.

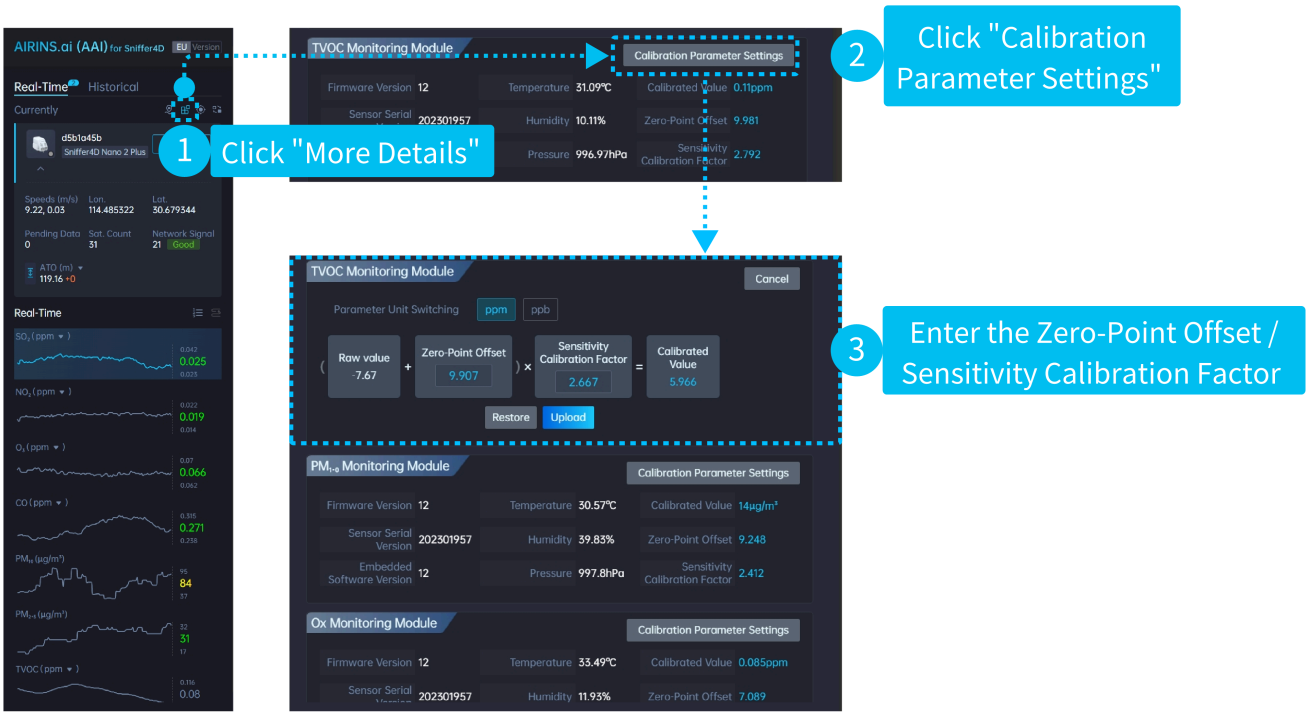

- As different monitoring modules require different warm-up times, **please wait until the concentration readings have fully stabilized before proceeding with calibration**.
- The Sniffer4D Nano 2 Plus must have reached a stable operating temperature before calibration. After calibration, **keep the device's operating temperature within ±2°C of the temperature at the time of calibration for best data quality**.

3. Calculate the new Zero-Point Offset using the formula shown below.

$$\text{New Zero-Point Offset} = \frac{\text{Reference Instrument Concentration} - \text{Current Calibrated Concentration of Sniffer4D Nano 2 Plus *}}{\text{Current Sensitivity Calibration Factor}} + \text{Current Zero-Point Offset *}$$

4. Using the reference instrument, obtain the corresponding monitoring value and apply the formula to calculate the new Zero-Point Offset. Enter the new value into the Zero-Point Offset input field in the module calibration interface, then tap "Upload".

- The "Current Zero-Point Offset" refers to the value currently shown in the interface. For example, in the sample screenshot, the current Zero-Point Offset is 0.000. (This value is for illustration purposes only and should not be used as a reference for calibrating your Sniffer4D Nano 2 Plus.)

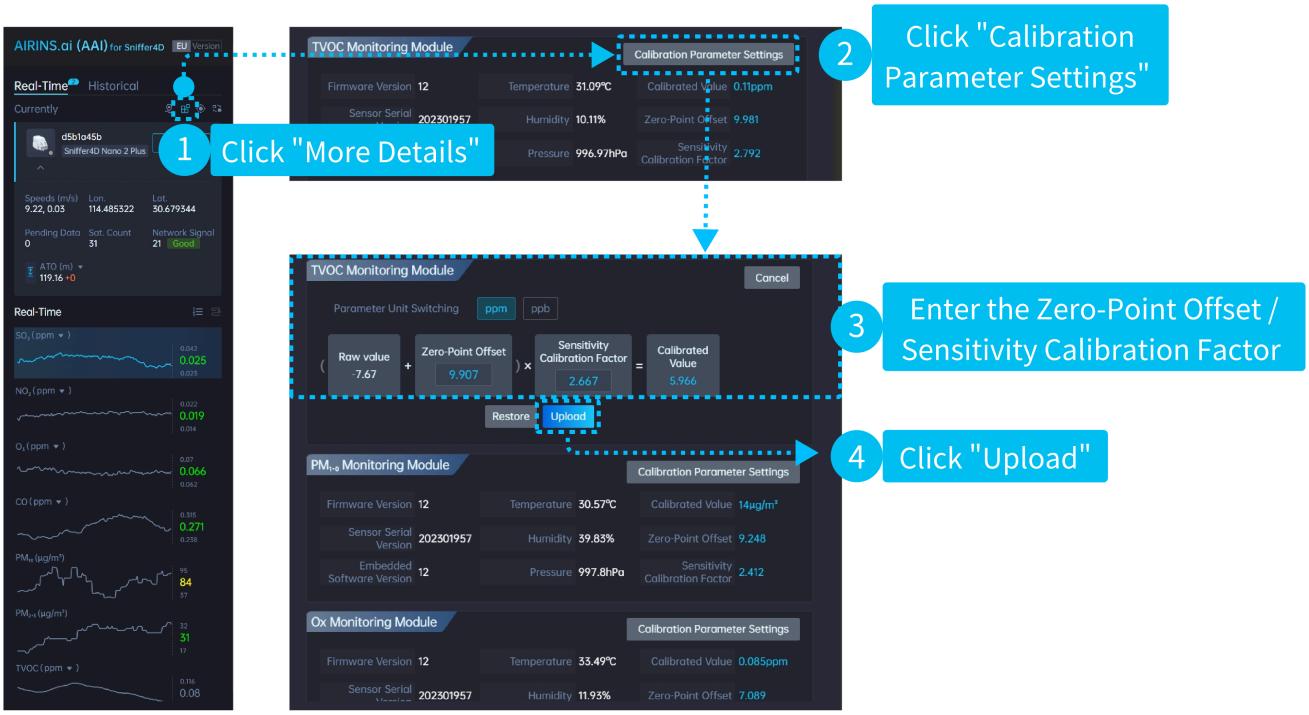

7.4 Precision Calibration (For Advanced Users Only)

> ❗ Precision calibration of the Sniffer4D Nano 2 Plus requires the use of a dedicated calibration chamber (sold separately). If needed, please contact your assigned AIRINS sales engineer.

- **Calibration Chamber Main Components**

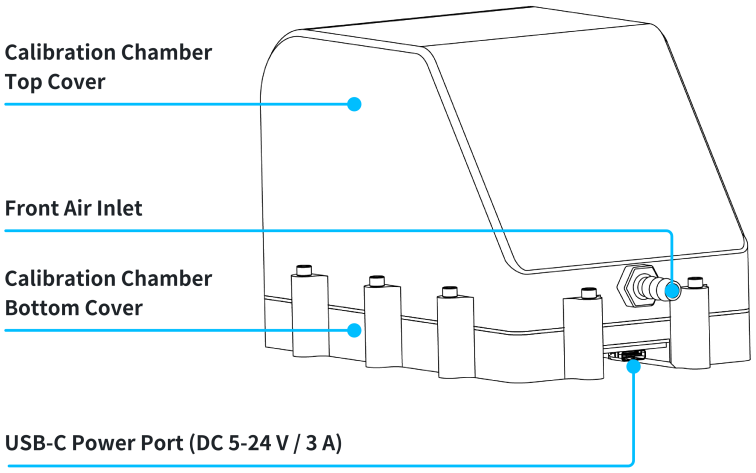

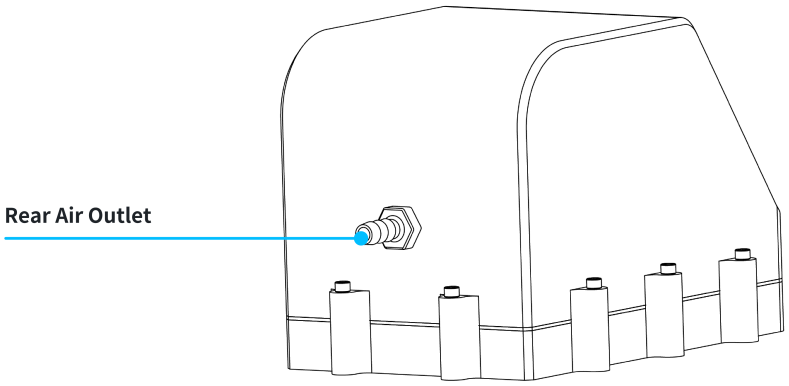

- **Procedure**
  - Using clean air and at least one gas of known concentration (two-or-multi-point calibration), this method determines the Sensitivity Calibration Factor and Zero-Point Offset of the monitoring module. This calibration method offers higher accuracy (assuming the reference gas is of good quality).
  - Before calibration, prepare the following: clean air, a gas cylinder containing the target gas at least a known concentration, tubing, a flow meter, the Sniffer4D Nano 2 Plus calibration chamber, and a power supply for the Sniffer4D Nano 2 Plus. Connect to the Sniffer4D Nano 2 Plus via network communication.
  - Steps:

    1. As illustrated, place the Sniffer4D Nano 2 Plus into the sealed chamber. Connect the USB-C power cable and confirm the device has started up normally, then tighten the surrounding fastening screws.

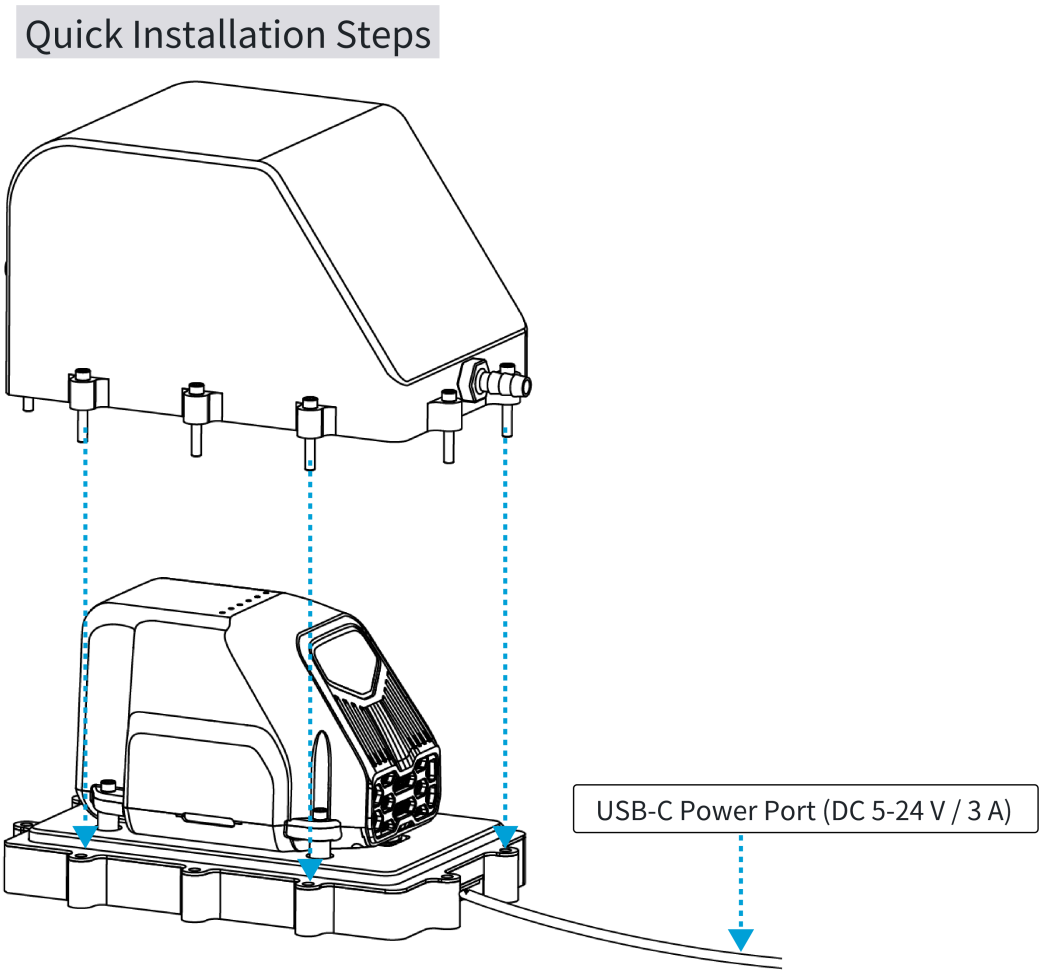

2. Connect the Sniffer4D Nano 2 Plus to the reference gas cylinder using tubing. Before calibration, verify that the entire gas circuit is airtight. If the gas cylinder does not have flow control, add a flow meter to the gas circuit. As network communication is used for parameter adjustment, ensure the Sniffer4D Nano 2 Plus is placed in an area with a strong network signal. (See diagram below for reference gas calibration setup.)

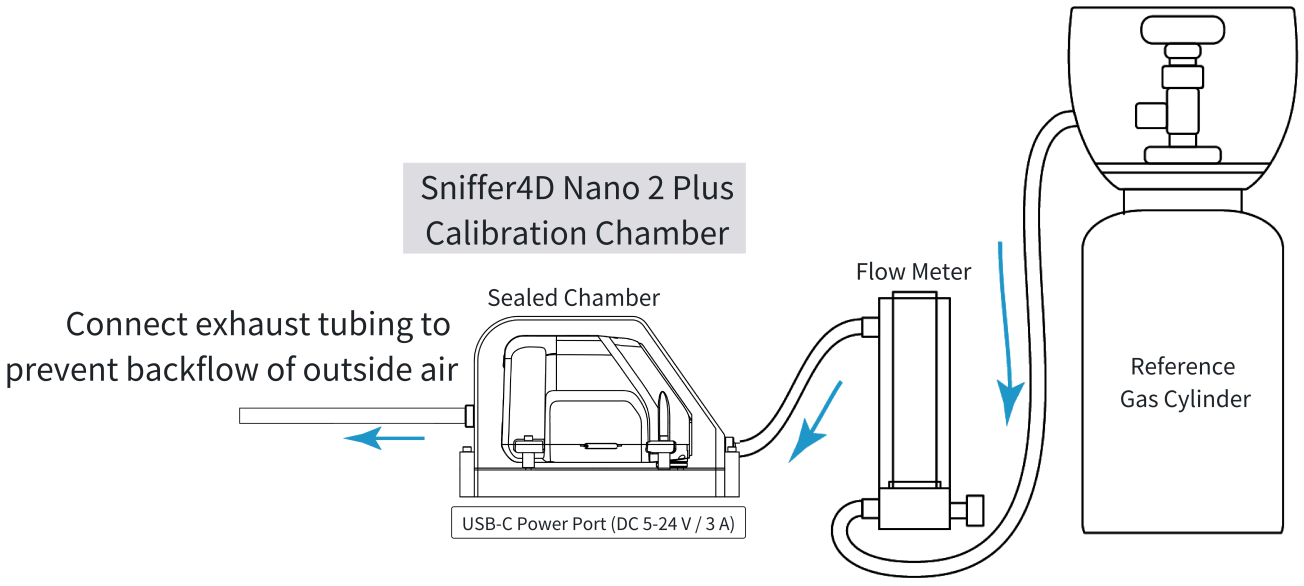

- Before introducing the reference gas, check the gas concentration and flow rate. For high-precision module calibration, avoid using reference gases at excessively high concentrations. Also verify the airtightness of the calibration chamber to prevent leaks from reducing the actual gas concentration.
- Precision calibration using clean air and a gas of known concentration requires a certain level of professional expertise. If you are unable to complete the procedure or do not have the necessary equipment, contact AIRINS technical support for assistance or to arrange a return for calibration.

3. Open AIRINS.ai and log in. Navigate to More Details and turn off the Active Air Intake switch (this disables the intake fan at the rear of the Sniffer4D Nano 2 Plus). On the More Details page, select the monitoring module you wish to calibrate, and tap Calibration Parameter Settings to enter the module calibration interface.



Always **turn off the active intake fans** during calibration to minimize disturbance to the reference gas.

4. Continuously inject **clean air** into the calibration chamber **at a flow rate of 1–3 L / min**. A flow meter can be used for precise control.

5. Once the readings have stabilized and are no longer decreasing (typically 1–10 minutes depending on conditions), calculate the new Zero-Point Offset:

- New Zero-Point Offset = Current Zero-Point Offset − Current device concentration reading.

- The "Current Zero-Point Offset" refers to the value currently shown in the interface.

6. Enter the new Zero-Point Offset into the Zero-Point Offset input field in the module calibration interface, then tap "Upload". (This value is for illustration purposes only and should not be used as a reference for calibrating your Sniffer4D Nano 2 Plus.)

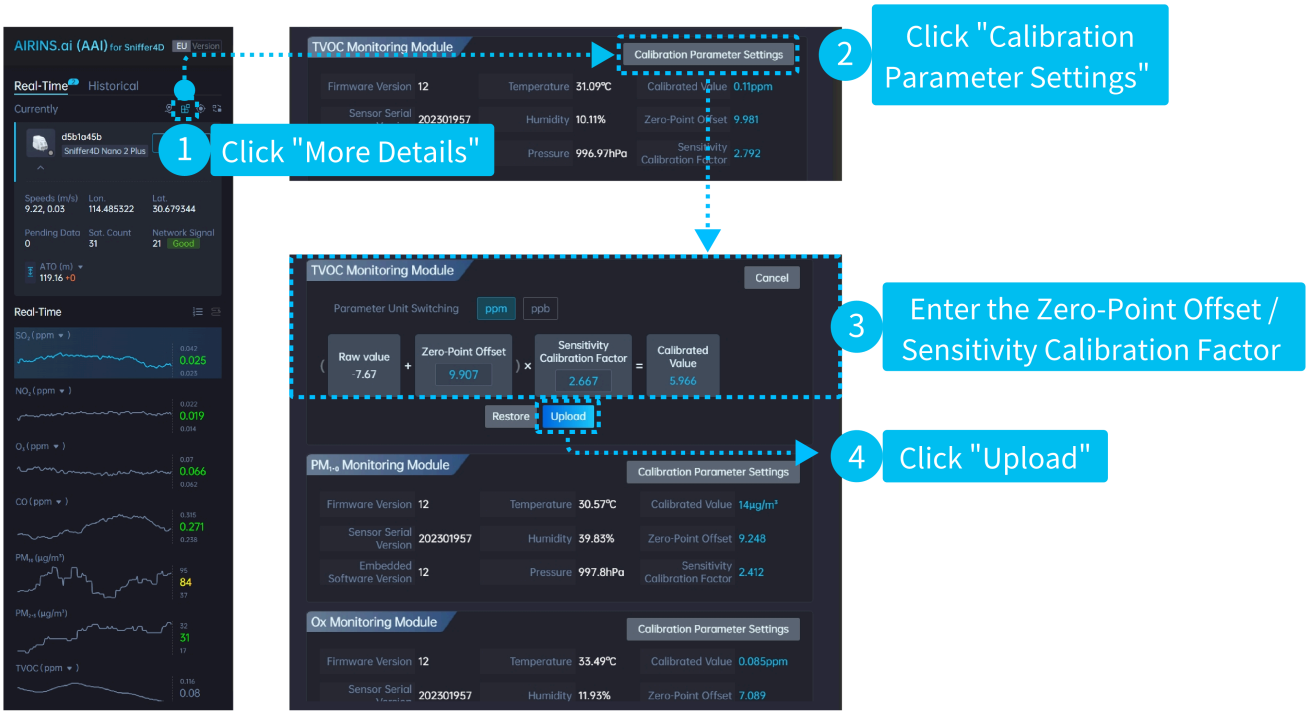

7. Continuously inject the target gas at a known concentration into the calibration chamber **at a flow rate of 1–3 L / min**.

PM: 500~800 μg/m³	TSP: 5 mg/m³	CO: 4~8 ppm
O_3: 4~8 ppm	SO_2: 4~8 ppm	High-Range SO_2: 50～70 ppm
CH_4: 1~3%	VOC: 10～20 ppm (Isobutylene)	H_2S: 20~30 ppm
HCl: 20~30 ppm	NH_3: 50~70 ppm	NO_2: 4~8 ppm

8. Once the readings have stabilized and are no longer increasing (typically 1–10 minutes depending on conditions), calculate the new Sensitivity Calibration Factor using the formula shown below.

$$\text{New Sensitivity Calibration Factor} = \frac{\text{Introduced Gas Concentration} - \text{Current Sensitivity Calibration Factor} *}{\text{Current Concentration Reading of Sniffer4D Nano 2 Plus}}$$

The "Current Sensitivity Calibration Factor" refers to the value currently shown in the interface. For example, in the sample screenshot, the current Sensitivity Calibration Factor is 1.5392.

9. Enter the new Sensitivity Calibration Factor into the Sensitivity Calibration Factor input field in the module calibration interface, then tap "Upload". (This value is for illustration purposes only and should not be used as a reference for calibrating your Sniffer4D Nano 2 Plus.)

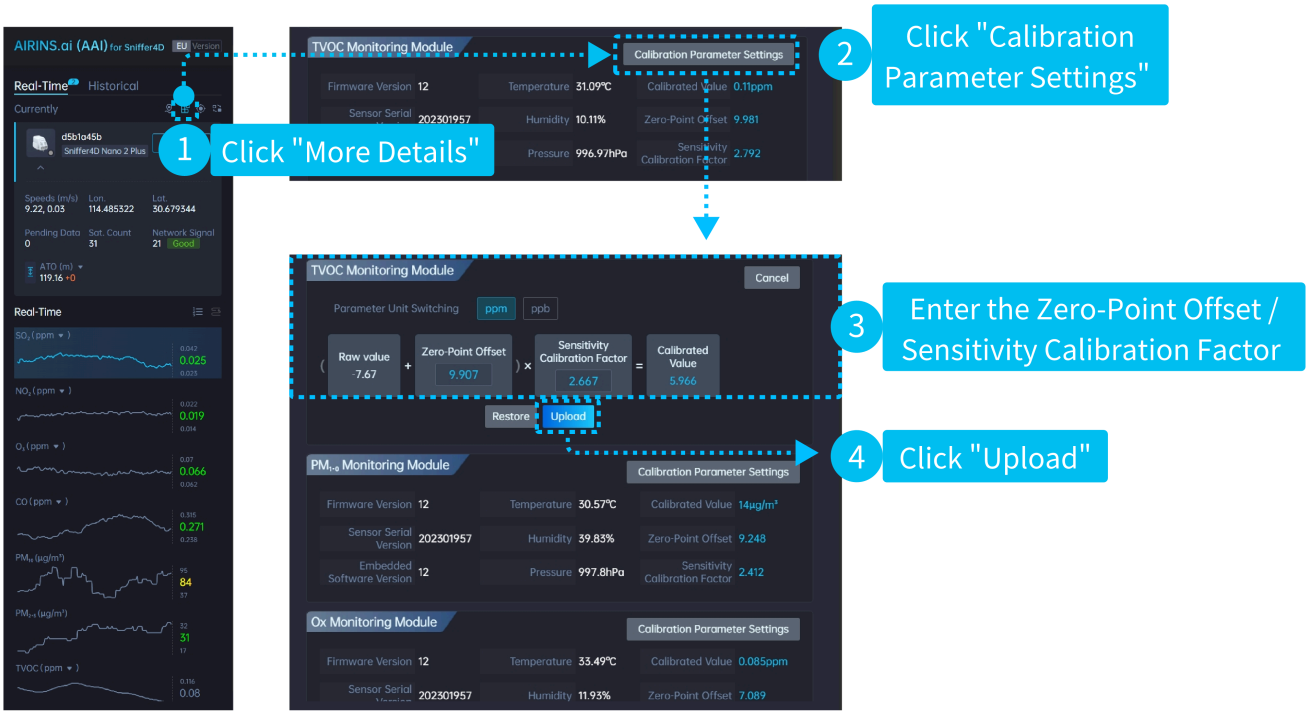

When calibrating for flammable or toxic gases, ensure all appropriate safety precautions are in place.

7.5 Configuring the TVOC Module for a Specific VOC Target Gas

- The PID TVOC monitoring module in the Sniffer4D Nano 2 Plus is set to isobutylene as the default target gas from the factory.
- To change the target VOC gas for the PID TVOC module, adjust the Sensitivity Calibration Factor in the PID TVOC module calibration interface.
- For the Sensitivity Calibration Factor corresponding to a specific TVOC target gas, refer to the list of detectable gases and their corresponding Sensitivity Calibration Factors for the PID TVOC monitoring module.

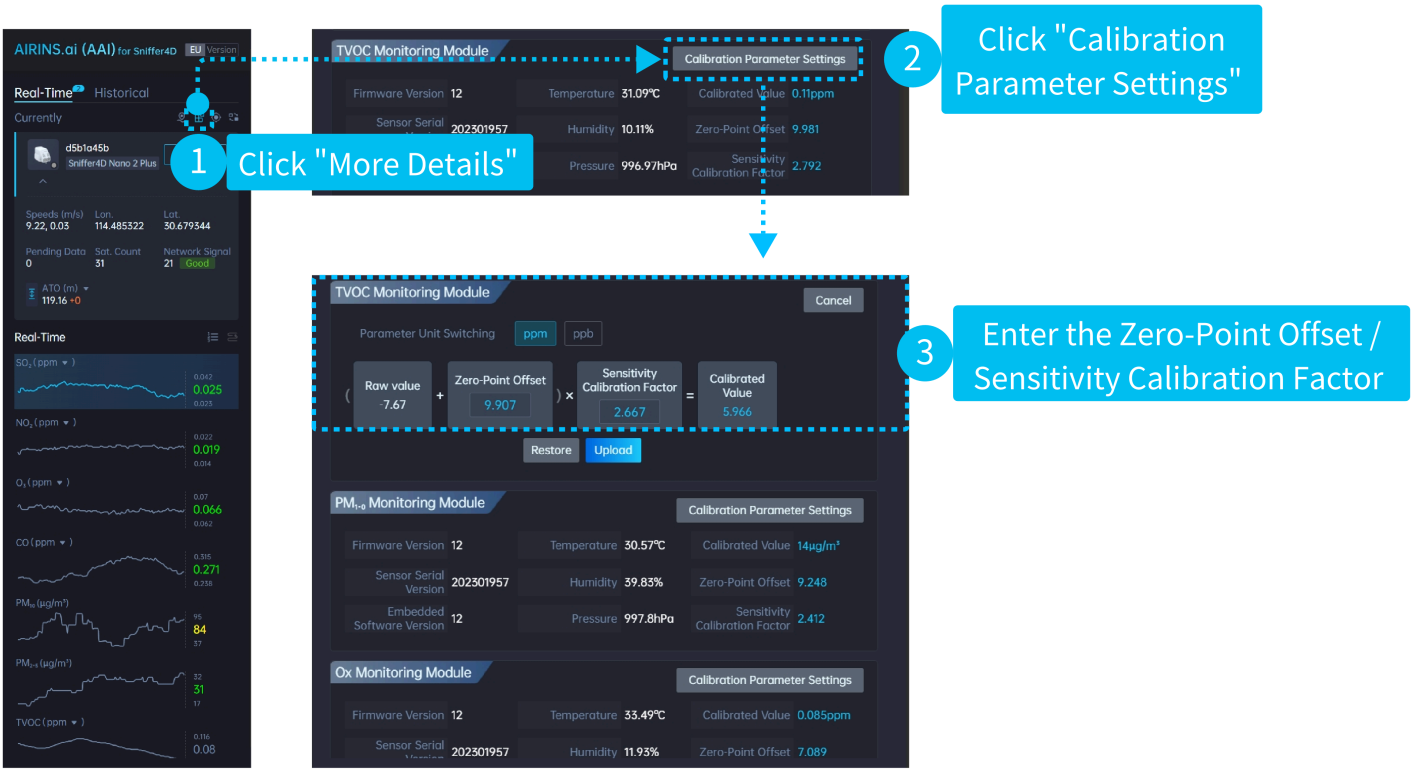

- As different monitoring modules require different warm-up times, please wait until the concentration readings have fully stabilized before proceeding with calibration.
- The Sniffer4D Nano 2 Plus must have reached a stable operating temperature before calibration. After calibration, keep the device's actual operating temperature within ±2°C of the temperature at the time of calibration for best data quality.
- Before making any changes, back up the current factory-default Sensitivity Calibration Factor so you can restore it to the default value if needed.

8. Common Operation Errors, Troubleshooting & Product Limitations

8.1 Common Operation Errors

- When installing the Sniffer4D Nano 2 Plus onto the Matrice 4D / 4TD, using incorrect screw specifications (e.g. installing the front and rear screws in reverse, resulting in the device not being securely fastened) may cause the device to lose communication with the UAV, or result in unstable communication.
- If the Sniffer4D Nano 2 Plus is not given a sufficient temperature-stabilizing time of 3–10 minutes before operation, the monitoring mission data may contain systematic errors (e.g. readings that continuously drift upward or downward).
- When running an automated monitoring mission, if the mission start and end recording zones are not correctly configured in AIRINS.ai, or if the start and end mission actions are not set during waypoint

mission planning, no mission data will be recorded.

- When powered by a supply that does not meet 5 V / 3 A (15 W), the Sniffer4D Nano 2 Plus may fail to start up fully or produce data with significant errors. Using the official AIRINS integration kits and AIRINS-recommended carrying platforms will minimize the likelihood of this issue.

8.2 Common Troubleshooting

- If the Sniffer4D Nano 2 Plus widget icon in DJI Pilot 2 fails to load correctly, this is typically caused by an incorrect startup sequence between the UAV and the remote controller. Fully closing and relaunching DJI Pilot 2 app should resolve the issue.
- You can enter the Sniffer4D Nano 2 Plus **Diagnostic Mode** for more information. When contacting after-sales support, proactively provide the content displayed (see illustration below) in the DJI Pilot 2 floating window under this mode for more efficient assistance.

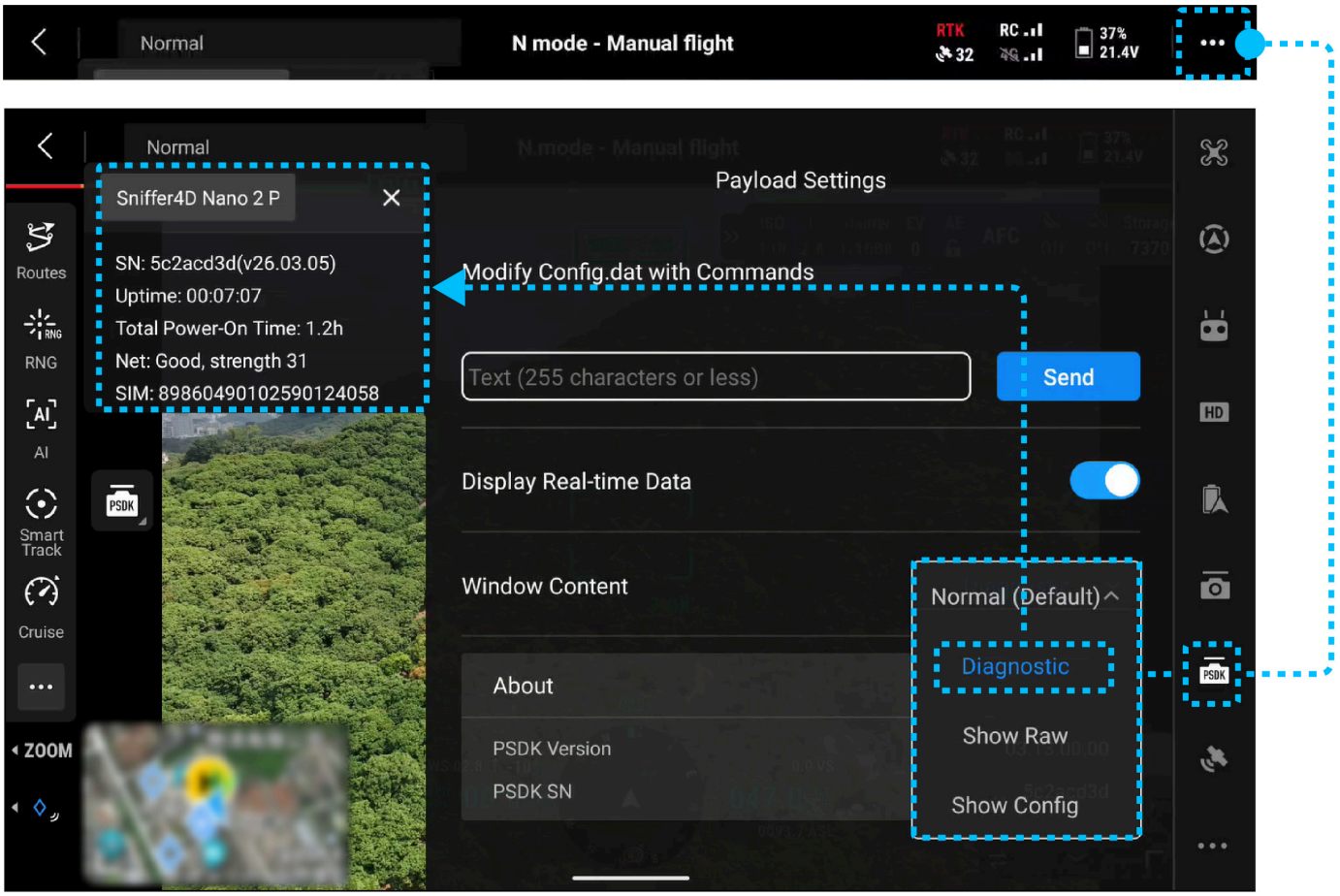

- **Measurement Noise Test for Sniffer4D Nano 2 Plus (Methane-Only Version)**: After the device is started and **fully warmed up** in a clean and stable environment, the CH4 concentration readings should show **only slight fluctuations**, approximately ±0.1 ppm, as shown in Figure 1. If the CH4 concentration readings **fluctuate significantly**, at ±0.5 ppm or higher, as shown in Figure 2, and do not return to normal after the device has been left running for 5 minutes, the methane measurement optical chamber is likely contaminated and the device should be returned to the factory for deep cleaning.

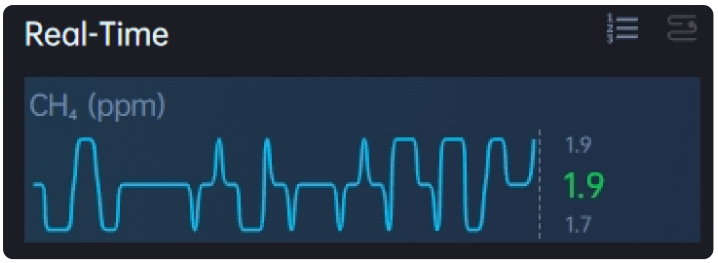

Figure 1 - **Normal**

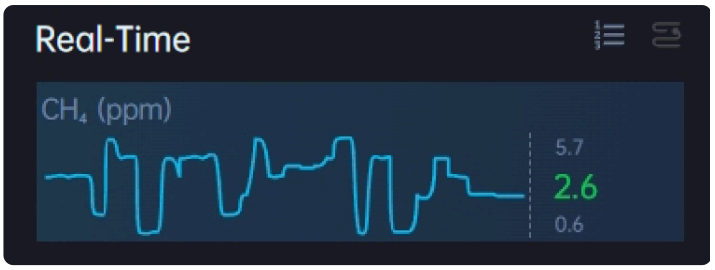

Figure 2 - **Abnormal**

8.3 Product Limitations

- Temperature drift in gas parameter readings: Some gas sensors in the Sniffer4D Nano 2 Plus operate on electrochemical principles and are susceptible to zero-point shifts caused by temperature changes. This drift (sometimes referred to as "dropping down to zero") is especially noticeable when monitoring in low-concentration scenarios (e.g. ambient air monitoring). **Where possible, ensure the device operates in a stable ambient temperature environment**.
- Not recommended for use in rain or high-humidity conditions: While the Sniffer4D Nano 2 Plus is water-resistant and will not be damaged by rain, sensor accuracy may be affected by ambient moisture in the environment.
- Power input: The Sniffer4D Nano 2 Plus supports direct connection to the DJI Matrice 4D / 4TD E-Port. It also supports power via a USB-A to USB-C cable, but does not support USB-C to USB-C cables. When using a USB-A to USB-C cable, the power supply must meet a DC 5–24 V / 3 A, otherwise Sniffer4D may not operate properly.
- Particulate matter readings may be affected by carrying platform movement: The particulate matter sensor in the Sniffer4D Nano 2 Plus uses diffusion-based air intake and cannot achieve fully isokinetic sampling. While the Sniffer4D Nano 2 Plus's specialized particulate matter intake design compensates for most motion-induced effects, it cannot eliminate them entirely. **During sudden acceleration, braking, sharp turns, or high-speed movement exceeding 10 m/s, particulate matter readings may exhibit brief minor fluctuations of 5–10 μg/m³**. We strongly recommend keeping platform movement smooth during operation, with a speed not exceeding 8 m/s.
- Gas parameter readings may be affected by carrying platform movement: The baseline (zero point) of gas parameter sensors in the Sniffer4D Nano 2 Plus (such as electrochemical and MP-TDLAS sensors) is sensitive to atmospheric pressure changes. While the Sniffer4D Nano 2 Plus's specialized intake design mitigates some pressure effects caused by movement, it cannot eliminate them entirely. **During sudden acceleration, braking, sharp turns, or high-speed movement especially exceeding 10 m/s, significant pressure changes around the device may cause brief fluctuations in gas parameter readings**. We strongly recommend keeping platform movement smooth during operation, with a speed not exceeding 8 m/s.